PINNACLE™
STRUCTURES, INC.

Double-lok®

Technical/Installation Information

IMPORTANT NOTICE

READ THIS MANUAL COMPLETELY PRIOR TO BEGINNING THE INSTALLATION OF THE DOUBLE-LOK® ROOFING SYSTEM. PINNACLE DETAILS MUST BE FOLLOWED AS A MINIMUM TO ENSURE APPROPRIATE WARRANTIES WILL BE ISSUED.

ALWAYS INSPECT EACH AND EVERY PANEL AND ALL ACCESSORIES BEFORE INSTALLATION. NEVER INSTALL ANY PRODUCT IF ITS QUALITY IS IN QUESTION. NOTIFY PINNACLE IMMEDIATELY IF ANY PRODUCT IS BELIEVED TO BE OUT OF TOLERANCE OR HAS BEEN DAMAGED DURING SHIPMENT.

IF THERE IS CONFLICT BETWEEN PROJECT ERECTION DRAWINGS PROVIDED OR APPROVED BY PINNACLE AND DETAILS IN THIS MANUAL, PROJECT ERECTION DRAWINGS WILL TAKE PRECEDENCE.

Ice Dam Disclaimer

Pinnacle designs its standing seam roofs to meet the load requirements dictated by governing codes and project specifications, including applicable snow loads. However, Pinnacle cannot be responsible for weathertightness or roof point loading issues or other hazards resulting from ice dam situations. Any time ice and snow can melt on the main body of the roof and refreeze at the eave or in the shadow of an adjacent wall, an ice dam situation may develop. In addition to local climate, ice dam formation is affected by many other factors, including but not limited to, roof insulation R-value, roof panel color, interior temperature of building, heater location in building, eave overhangs, parapet walls, shading of building roof areas from adjacent trees, parapets, buildings, etc. These factors are design and maintenance issues and are outside the control of Pinnacle. Pinnacle can make the following recommendations concerning standing seam roofs installed in freezing climates:

- Always use field seamed panels. These machine-folded seams are more durable when subjected to occasional icing.
- Eliminate "cold" eave overhangs and parapet walls from the building design. Roof overhangs outside the heated envelope of the building will tend to be colder than the roof areas over the heated envelope. Simple roof designs are preferred. Parapet walls at the eave allow ice and snow to collect due to shading effects and the lower roof temperatures caused thereby.
- Make sure the interior of the building is adequately insulated and the heating is properly distributed. Inadequate insulation in the roof and/or improper heat distribution causes heat flow though the main body of the roof. On days when the temperature is below freezing, this heat gain can cause ice and snow to melt and refreeze at the eave where the roof is colder.
- Lay out the building to prevent the eaves and other roof areas from being shaded during the winter. This may mean eliminating adjacent trees or reconsidering roof geometries.
- Consider using self-regulating heating cables at the eaves to mitigate the effects of ice dams.
- On building designs using attics, over-insulate the attic floor and provide adequate ventilation in the attic. This will reduce heat transfer through the roof resulting in more consistent roof temperatures between eave and field of roof.
- Increase the degree of diligence with respect to underlayment materials at roof areas prone to icing. This may include valleys, eaves, dormers and roof areas near dormers, parapets and the like where shading may occur.

For more information on this subject, please refer to the MCA's Metal Roof Design For Cold Climates manual.

The Engineering data contained herein is for the expressed use of customers and design professionals. Along with this data, it is recommended that the design professional have a copy of the most current version of the North American Specification for the Design of Cold-Formed Steel Structural Members published by the American Iron and Steel Institute to facilitate design. This Specification contains the design criteria for cold-formed steel components. Along with the Specification, the designer should reference the most current building code applicable to the project jobsite in order to determine environmental loads. If further information or guidance regarding cold-formed design practices is desired, please contact the manufacturer.

©Copyright NCI Group, Inc. All Rights Reserved. 09-2015

Descriptions and specifications contained herein were in effect at the time this publication was approved for printing. In a continuing effort to refine and improve products, Pinnacle reserves the right to discontinue products at any time or change specifications and/or designs without incurring obligation. To ensure you have the latest information available, please inquire or visit our website at www.pinnaclestructures.com. Application details are for illustration purposes only and may not be appropriate for all environmental conditions, building designs or panel profiles. Projects should be designed to conform to applicable building codes, regulations and accepted industry practices. If there is a conflict between this manual and project erection drawings, the erection drawings will take precedence.

TABLE OF CONTENTS

ROOFING SYSTEM

Features And Benefits DL-2

ENGINEERING

Read This First. DL-3
UL 90 Construction Numbers. DL-4
Factory Mutual Approval DL-4
ICBO Approval/Florida Building Code Product Approval DL-4
24" Section Properties/Load Tables. DL-5-6
18" Section Properties/Load Tables. DL-7-8
12" Section Properties/Load Tables. DL-9-10

SPECIFICATIONS

Specifications For Metal Roofing DL-11-16

GENERAL INFORMATION

General Description DL-17
Product Checklist DL-18-26
Preparatory Requirements. DL-27
Unloading. DL-28
Handling & Panel Storage DL-29

ERECTION SEQUENCE

Step 1 —Rake Support DL-30
Step 2 —Low System Eave. DL-31
Step 2A– Low System Eave/Metal Inside Closure DL-32
Step 2B– High System Eave DL-33
Step 2C– High System Eave/Metal Inside Closure DL-34
Step 3 —Thermal Spacer (for high systems only) DL-35
Step 4 —First Panel. DL-36-37
Step 5 —Back-Up Plate. DL-38
Step 6 —Clip Installation DL-39
Step 7 —Endlap Panel DL-40
Step 8 —Standard Endlap DL-41
Step 9 —Ridge Panel DL-42
Step 10—Subsequent Runs Eave DL-43
Step 11—Subsequent Runs Endlap DL-44
Step 12—Subsequent Runs Ridge/Outside Closure DL-45
Step 13—Seaming Panel Sidelaps DL-46-48
Step 14—Last Panel Run DL-49
Step 14A–Last Panel Run (Optional) DL-50
Step 15—Outside Closure DL-51
Step 16—Ridge Outside Closure/Flashing DL-52

SPECIAL ERECTION TECHNIQUES

Recommended Erection Practices DL-53-55
Light Transmitting Panel Trim Installation (Optional) DL-56
Field Located LTP Installation DL-57-61
Ridge Ventilator DL-62-64
Vented Ridge DL-65
Mid Slope Fixed Condition DL-66
Roof Curb Installation DL-67-73
Pipe Penetration Installation DL-74-75
Repair Cap On Damaged Double-Lok® Seams DL-76
S-5!™ Double-Lok® Wind Clamps DL-77

DESIGN

Trim Details
- Eave To Endlap DL-78
- Ridge DL-79
- Floating Peak Box DL-80
- Rake DL-81
- Rake To Rake DL-82
- Rake Parapet DL-83
- High Eave Parapet DL-84
- Eave DL-85
- Snow Gutter DL-86
- Hip DL-87
- Valley DL-88

GENERAL INFORMATION

Proper Handling, Storage and Maintenance DL-89-90

PINNACLE™ STRUCTURES. INC.

ROOFING SYSTEM double-lok®

FEATURES AND BENEFITS

1. DESIGN INTEGRITY
   Pinnacle's **Double-Lok®** mechanically seamed system begins and ends in the high, reducing the risk of leakage at the rake that can occur when finishing in the low. The panel seam includes factory-applied mastic.
2. FLOATING ROOF
   The **Double-Lok®** roof was designed to cope with the forces of expansion and contraction. This is accomplished by allowing the panels to freely move up and down the roof slope.
3. SLIDING CLIPS
   2" and 4" Sliding Clips are available, with the 2" version providing 1¼" movement in each direction while the 4" version provides for 2" of movement in each direction. Both clips are also available in high and low versions, which provides a ⅜" clearance or a 1 ⅜" clearance, allowing for a variety of thermal spacer and insulation thickness combinations.
4. UL 90 RATING
   The **Double-Lok®** roof system has 7 different UL 90 construction numbers, each of which is available with several options.
5. FACTORY MUTUAL APPROVAL
   The **Double-Lok®** roof has been tested by Factory Mutual Research Corporation for wind uplift, fire and hail damage under Standard 4471 achieving various ratings. Refer to page DL-4 for summary information.
6. FIRE RESISTANCE RATINGS
   The roof system qualifies for use in several UL design assemblies and carries a UL “Class A” Fire Rating.
7. SIMPLICITY
   No troublesome batten cap is needed. The panels simply seam together forming a watertight seal.
8. FLEXIBILITY
   Pinnacle's **Double-Lok®** roof system offers welcome flexibility to the erector. Wall covering can be erected before or after the roof is installed. Panel installation is an uninterrupted procedure.
9. EASE OF INSTALLATION
   The erector has the option to sheet each side of the roof separately or both sides simultaneously, which greatly increases the speed and convenience of erection. Being reversible end-for-end, sheets do not have to be special ordered for each side of the building. No field notching of panels at endlaps or ridge is required.
10. FORGIVING SYSTEM
    The **Double-Lok®** design allows for the roof to be finished in the high when an out-of-square condition or other factors cause the roof to terminate up to 4" out of module.
11. BUILDING LENGTH
    Odd, as well as even, footage buildings can be terminated in a major rib with the use of our 12" or 18" panel or in the low by field bending the panel.
12. PREPUNCHED PANELS AND COMPONENTS
    Pinnacle's prepunched system, combined with self-engaging back-up plates, assures panel module and speeds up roof installation.
13. DURABILITY
    Every unpainted panel is manufactured from **Galvalume Plus®**, your assurance of the manufacturer's commitment to quality.
14. COLOR AND FINISHES
    Double-Lok® is available in a wide variety of popular colors in three different paint systems.
    Double-Lok® is a registered trademark of NCI Group, Inc.
    Galvalume Plus® is a registered trademark of BIEC International, Inc.
    Vise-Grip® is a registered trademark of American Tool Companies, Inc.
    S-5!™ is a trademark of Metal Roof Innovations.

double-lok® ENGINEERING

CAUTION

Application and design details are for illustration purposes only, and may not be appropriate for all environmental conditions or building designs. Projects should be engineered to conform to applicable building codes, regulations, and accepted industry practices.

CAUTION

The use of any field seaming machine other than that provided by the manufacturer may damage the panels, void all warranties and will void all engineering data.

Low Floating System - Double slope buildings over 200' wide or single slope buildings over 100' wide, with or without ⅜" thermal spacer. **See Insulation/Thermal Spacer Selection Chart below.**

High Floating System - Double slope buildings over 200' wide or single slope buildings over 100' wide, with ⅜", ⅝" or 1" thermal spacer. **See Insulation/Thermal Spacer Selection Chart below.**

Thermal calculations should be performed for each project to ensure that the thermal movement of the roof is not greater than the floating clip's capacity. Various densities of blanket insulation may affect the installation and or the appearance of a metal roof system. The installer is responsible for selecting the proper clip and thermal spacer for their conditions.

Insulation/Thermal Spacer Selection Chart

Insulation Thickness	Low System	High System	2" Hi-Thermal System
No Insulation	3/8" Thermal Spacer	High System Not Recommended	2" Hi-Thermal System Not Recommended
3" Insulation	Thermal Spacer Not Recommended	1" Thermal Spacer Recommended	2" Hi-Thermal System Not Recommended
4" Insulation	Thermal Spacer Not Recommended	5/8" Thermal Spacer Recommended	2" Hi-Thermal System Not Recommended
6" Insulation	Low System Not Recommended	3/8" Thermal Spacer Recommended	1" Thermal Spacer Recommended
8" Insulation	Low System Not Recommended	Thermal Spacer Not Recommended	5/8" Thermal Spacer Recommended
10" Insulation	Low System Not Recommended	High System Not Recommended	3/8" Thermal Spacer Recommended
12" Insulation	Low System Not Recommended	High System Not Recommended	Thermal Spacer Not Recommended

NOTES:

1. As with all standing seam roof systems, sound attenuation (example: blanket insulation) is required between the panel and the substructure to prevent "roof rumble" during windy conditions. **Some composite roof systems may require additional acoustical consideration to ensure that thermal vibration noises are isolated from the building interior. Contact your architect and/or engineer for proper acoustical design.**
2. A vapor retarder may be necessary to protect roofing components when high interior humidity is a factor. The need for a vapor retarder, as well as the type, placement and location should be determined by a architect or engineer. The following are examples of conditions that may require a vapor retarder: (A) Project where outside winter temperatures below 40º F are anticipated and where average winter interior relative humidity of 45% or greater is expected. (B) Building usages with high humidity interiors, such as indoor swimming pools, textile manufacturing operations, food, paper or other wet-process industrial plants. (C) Construction elements that my release moisture after the roof is installed, such as interior concrete and masonry, plaster finishes ad fuel burning heaters.

THERMAL SPACER DISCLAIMER

The above thermal spacer chart is intended to be used as a general guideline only. Because of the various densities of insulation currently available, the manufacturer cannot guarantee that this chart will be accurate in all situations. Further, the manufacturer does not specifically require that the roofing contractor use thermal spacers with it's **Double-Lok®** roof system. However, please review the following information:

- Although the manufacturer does not require a thermal spacer, the architect or building owner may.
- In certain environments, the compression of the fiberglass insulation, without a thermal spacer, may create a thermal break which can cause condensation to form on the purlins/joists.
- On uninsulated buildings, eliminating the thermal spacer: (1) may cause "roof rumble" and (2) you may encounter problems holding panel module.
- When a high clip is used without a thermal spacer: (1) you may encounter problems holding panel module and (2) foot traffic on the panel ribs may result in bent clips.
- Using a low clip with too much insulation or too thick a thermal spacer: (1) may cause "purlin read" (2) may cause difficulty in properly installing the panel side laps, and (3) you may encounter problems holding panel module.

PINNACLE™ STRUCTURES. INC.

ENGINEERING double-lok®

Construction Number	Panel Width (In.)	Gauge	Clip Type	Substrate	UL-2218 Impact Resistance	UL-263 Fire Rating	UL-580 Rating
165	24	24 min.	Sliding	Open Framing	Class 4	Class A	Class 90
180C	24	24 min.	Sliding	Composite System	Class 4	Class A	Class 90
287	24	24 min.	Sliding	Open Framing	Class 4	Class A	Class 90
308A	24	24 min.	Sliding	Composite System	Class 4	Class A	Class 90
450	24	24 min.	Sliding	Open Framing	Class 4	Class A	Class 90
538	24	24 min.	Sliding	Open Framing	Class 4	Class A	Class 90
539	24	24 min.	Sliding	Composite System	Class 4	Class A	Class 90
540	24	24 min.	Sliding	Composite System	Class 4	Class A	Class 90

NOTES:

1. Tests procedures are in accordance with Underwriters Laboratories Standard UL-580 under "Tests For Uplift Resistance of Roof Assemblies".
2. A detailed installation method is available for each Construction Number above and can be found in the UL Roofing Materials and Systems Directory. The panels must be installed in a certain manner to achieve the published results when installed over a Class A sub structure.
3. The panel qualifies for a Class A fire rating in compliance with Underwriters Laboratories Standard UL-263.
4. The panel system is listed under the following Fire Resistance Design Numbers: P225, P227, P230, P237, P265, P268, P508, P510, P512, P701, P711, P717, P720, P722, P726, P731, P734, P801, P815, and P819. Refer to the UL Fire Resistance Directory for specific construction methods and hourly ratings.
5. Construction Number 450 includes the use of a domed skylight.

FACTORY MUTUAL APPROVAL
Double-Lok®

Panel Width	Gauge	Clip Type	Clip Spacing	Substrate	# of Fasteners per Clip	Wind Clamp per Clip	Hail Damage Rating	ASTM E108 Fire Rating	FM Windstorm Rating
24	24	2" Sliding	5'-0"	Open Framing	2	n/a	Class 1-SH	Class A	Class 1-60
24	24	2" Sliding	5'-0"	Open Framing	2	1	Class 1-SH	Class A	Class 1-75
24	22	2" Sliding	5'-0"	Open Framing	2	n/a	Class 1-SH	Class A	Class 1-75
24	24	2" Sliding	5'-0"	Open Framing	2	1	Class 1-SH	Class A	Class 1-90
24	22	2" Sliding	4'-0"	Open Framing	2	n/a	Class 1-SH	Class A	Class 1-90
18	24	2" Sliding	5'-0"	Open Framing	2	n/a	Class 1-SH	Class A	Class 1-90
24	22	2" Sliding	4'-0"	Open Framing	2	n/a	Class 1-SH	Class A	Class 1-105
24	22	2" Sliding	3'-6"	Open Framing	2	n/a	Class 1-SH	Class A	Class 1-105
24	22	4" Sliding	5'-0"	Open Framing	3	1	Class 1-SH	Class A	Class 1-120
18	24	2" Sliding	5'-0"	Open Framing	3	1	Class 1-SH	Class A	Class 1-135
24	22	4" Sliding	5'-0"	Open Framing	3	2	Class 1-SH	Class A	Class 1-150

NOTES:

1. Tests procedures are in accordance with Factory Mutual Research Corporation (FMRC) Standard 4471.
2. A detailed test report is available for each product above. The panels must be installed in a specific manner to achieve the published results. Contact the manufacturer for more information.

FLORIDA BUILDING CODE PRODUCT APPROVAL

Double-Lok® Roofing System details and engineering load tables have been examined by the State of Florida and comply with the 2010 Florida Building Code Product Approval Number (FL#11819.2).

PINNACLE™ STRUCTURES. INC.

double-lok® ENGINEERING

Double-Lok® PANEL
24" Coverage

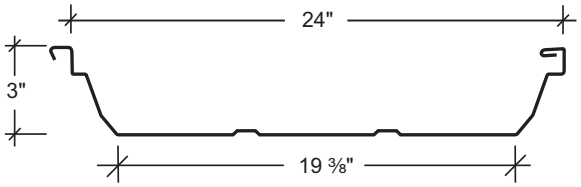

SECTION PROPERTIES								
			NEGATIVE BENDING			POSITIVE BENDING		
PANEL GAUGE	Fy (KSI)	WEIGHT (PSF)	Ixe (IN.4/FT.)	Sxe (IN.3/FT.)	Maxo (KIP-IN.)	Ixe (IN.4/FT.)	Sxe (IN.3/FT.)	Maxo (KIP-IN.)
24	50	1.23	0.1507	0.0989	2.9619	0.3224	0.1308	3.9166
22	50	1.56	0.2059	0.1394	4.1741	0.4205	0.1709	5.1171

NOTES:
1. All calculations for the properties of ***Double-Lok®*** panels are calculated in accordance with the 2012 Edition of the *North American Specification For Design Of Cold-Formed Steel Structural Members*.
2. Ixe is for deflection determination.
3. Sxe is for bending.
4. Maxo is allowable bending moment.
5. All values are for the one foot of panel width.

The engineering data contained herein is for the expressed use of customers and design professionals. Along with this data, it is recommended that the design professional have a copy of the most current version of the *North American Specification for the Design of Cold-Formed Steel Structural Members* published by the American Iron and Steel Institute to facilitate design. This Specification contains the design criteria for cold-formed steel components. Along with the Specification, the designer should reference the most current building code applicable to the project jobsite in order to determine environmental loads. If further information or guidance regarding cold-formed design practices is desired, please contact the manufacturer.

PINNACLE STRUCTURES, INC.

ENGINEERING double-lok®

Double-Lok® PANEL
24" Coverage

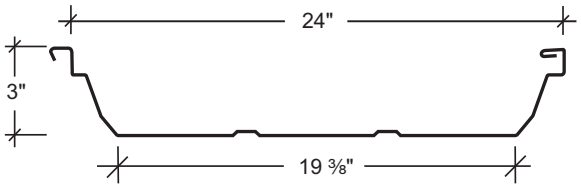

ALLOWABLE UNIFORM LOADS IN POUNDS PER SQUARE FOOT

24 Gauge (Fy = 50 KSI)								
SPAN TYPE	LOAD TYPE	SPAN IN FEET						
		2.5	3.0	3.5	4.0	4.5	5.0	5.5
SINGLE	LIVE	204.0	170.0	145.7	127.5	113.3	102.0	86.3
2-SPAN	LIVE	204.0	170.0	145.7	123.4	97.5	79.0	65.3
3-SPAN	LIVE	204.0	170.0	145.7	127.5	113.3	98.7	81.6
4-SPAN	LIVE	204.0	170.0	145.7	127.5	113.3	92.2	76.2

22 Gauge (Fy = 50 KSI)								
SPAN TYPE	LOAD TYPE	SPAN IN FEET						
		2.5	3.0	3.5	4.0	4.5	5.0	5.5
SINGLE	LIVE	296.9	247.5	212.1	185.6	165.0	136.5	112.8
2-SPAN	LIVE	296.9	247.5	212.1	173.9	137.4	111.3	92.0
3-SPAN	LIVE	296.9	247.5	212.1	185.6	165.0	139.1	115.0
4-SPAN	LIVE	296.9	247.5	212.1	185.6	160.4	129.9	107.4

NOTES:

1. **THE ABOVE LOADS ARE NOT FOR USE WHEN DESIGNING PANELS TO RESIST WIND UPLIFT.**
2. Strenght calculations based on the 2012 AISI Standard *North American Specification for the Design of Cold-Formed Steel Structural Members.*
3. Allowable loads are applicable for uniform loading and spans without overhangs.
4. POSITIVE load capacities are for those loads that push the panel against its supports. The applicable limit states are flexure, shear, combined shear and flexure, web crippling at end and interior supports, and a deflection limit of L/180 under strenght-level loads.
5. Panel pullover and screw pullout capacity must be checked separately using the screws employed for each particular application when utilizing this load chart.
6. The use of any field seaming equipment or accessories including but not limited to clips, fasteners, and support plates (eave, backup, rake, etc.) other than that provided by the manufacturer may damage panels, void all warranties and will void all engineering data.
7. This material is subject to change without notice. Please contact Pinnacle for the most current data.

The engineering data contained herein is for the expressed use of customers and design professionals. Along with this data, it is recommended that the design professional have a copy of the most current version of the *North American Specification for the Design of Cold-Formed Steel Structural Members* published by the American Iron and Steel Institute to facilitate design. This Specification contains the design criteria for cold-formed steel components. Along with the Specification, the designer should reference the most current building code applicable to the project jobsite in order to determine environmental loads. If further information or guidance regarding cold-formed design practices is desired, please contact the manufacturer.

double-lok® ENGINEERING

Double-Lok® PANEL
18" Coverage

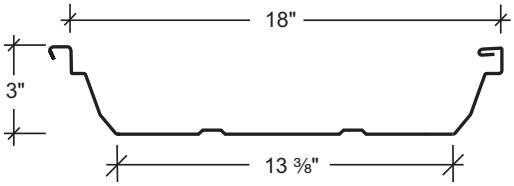

SECTION PROPERTIES								
			NEGATIVE BENDING			POSITIVE BENDING		
PANEL GAUGE	Fy (KSI)	WEIGHT (PSF)	Ixe (IN.4/FT.)	Sxe (IN.3/FT.)	Maxo (KIP-IN.)	Ixe (IN.4/FT.)	Sxe (IN.3/FT.)	Maxo (KIP-IN.)
24	50	1.32	0.1994	0.1313	3.9306	0.3814	0.1651	4.9449
22	50	1.66	0.2718	0.1846	5.5274	0.4968	0.2154	6.4494

NOTES:
1. All calculations for the properties of ***Double-Lok***® panels are calculated in accordance with the 2012 Edition of the *North American Specification For Design Of Cold-Formed Steel Structural Members*.
2. Ixe is for deflection determination.
3. Sxe is for bending.
4. Maxo is allowable bending moment.
5. All values are for the one foot of panel width.

The engineering data contained herein is for the expressed use of customers and design professionals. Along with this data, it is recommended that the design professional have a copy of the most current version of the *North American Specification for the Design of Cold-Formed Steel Structural Members* published by the American Iron and Steel Institute to facilitate design. This Specification contains the design criteria for cold-formed steel components. Along with the Specification, the designer should reference the most current building code applicable to the project jobsite in order to determine environmental loads. If further information or guidance regarding cold-formed design practices is desired, please contact the manufacturer.

PINNACLE STRUCTURES. INC.™

ENGINEERING double-lok®

Double-Lok® PANEL
18" Coverage

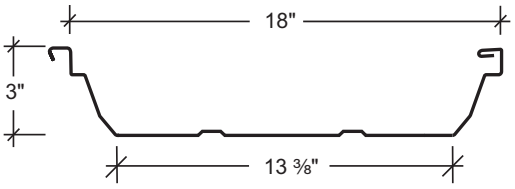

ALLOWABLE UNIFORM LOADS IN POUNDS PER SQUARE FOOT

24 Gauge (Fy = 50 KSI)								
SPAN TYPE	LOAD TYPE	SPAN IN FEET						
		2.5	3.0	3.5	4.0	4.5	5.0	5.5
SINGLE	LIVE	272.0	226.7	194.3	170.0	151.1	131.9	109.0
2-SPAN	LIVE	272.0	226.7	194.3	163.8	129.4	104.8	86.6
3-SPAN	LIVE	272.0	226.7	194.3	170.0	151.1	131.0	108.3
4-SPAN	LIVE	272.0	226.7	194.3	170.0	151.0	122.3	101.1

22 Gauge (Fy = 50 KSI)								
SPAN TYPE	LOAD TYPE	SPAN IN FEET						
		2.5	3.0	3.5	4.0	4.5	5.0	5.5
SINGLE	LIVE	395.9	329.9	282.8	247.5	212.3	172.0	142.1
2-SPAN	LIVE	395.9	329.9	282.8	230.3	182.0	147.4	121.8
3-SPAN	LIVE	395.9	329.9	282.8	247.5	220.0	184.2	152.3
4-SPAN	LIVE	395.9	329.9	282.8	247.5	212.4	172.0	142.2

NOTES:

1. **THE ABOVE LOADS ARE NOT FOR USE WHEN DESIGNING PANELS TO RESIST WIND UPLIFT.**
2. Strenght calculations based on the 2012 AISI Standard *North American Specification for the Design of Cold-Formed Steel Structural Members.*
3. Allowable loads are applicable for uniform loading and spans without overhangs.
4. LIVE load capacities are for those loads that push the panel against its supports. The applicable limit states are flexure, shear, combined shear and flexure, web crippling at end and interior supports, and a deflection limit of L/180 under strenght-level loads.
5. Panel pullover and screw pullout capacity must be checked separately using the screws employed for each particular application when utilizing this load chart.
6. The use of any field seaming equipment or accessories including but not limited to clips, fasteners, and support plates (eave, backup, rake, etc.) other than that provided by the manufacturer may damage panels, void all warranties and will void all engineering data.
7. This material is subject to change without notice. Please contact Pinnacle for the most current data.

The engineering data contained herein is for the expressed use of customers and design professionals. Along with this data, it is recommended that the design professional have a copy of the most current version of the *North American Specification for the Design of Cold-Formed Steel Structural Members* published by the American Iron and Steel Institute to facilitate design. This Specification contains the design criteria for cold-formed steel components. Along with the Specification, the designer should reference the most current building code applicable to the project jobsite in order to determine environmental loads. If further information or guidance regarding cold-formed design practices is desired, please contact the manufacturer.

Double-Lok® PANEL

12" Coverage

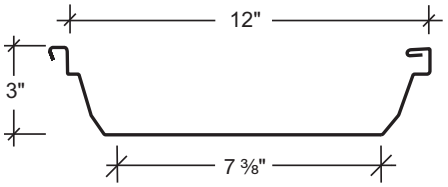

SECTION PROPERTIES								
			NEGATIVE BENDING			POSITIVE BENDING		
PANEL GAUGE	Fy (KSI)	WEIGHT (PSF)	Ixe (IN.4/FT.)	Sxe (IN.3/FT.)	Maxo (KIP-IN.)	Ixe (IN.4/FT.)	Sxe (IN.3/FT.)	Maxo (KIP-IN.)
24	50	1.48	0.2590	0.1612	4.8271	0.4754	0.2292	6.8642
22	50	1.86	0.3594	0.2317	6.9371	0.6167	0.2981	8.9264

NOTES:

1. All calculations for the properties of ***Double-Lok®*** panels are calculated in accordance with the 2012 Edition of the *North American Specification For Design Of Cold-Formed Steel Structural Members*.
2. Ixe is for deflection determination.
3. Sxe is for bending.
4. Maxo is allowable bending moment.
5. All values are for the one foot of panel width.

The engineering data contained herein is for the expressed use of customers and design professionals. Along with this data, it is recommended that the design professional have a copy of the most current version of the *North American Specification for the Design of Cold-Formed Steel Structural Members* published by the American Iron and Steel Institute to facilitate design. This Specification contains the design criteria for cold-formed steel components. Along with the Specification, the designer should reference the most current building code applicable to the project jobsite in order to determine environmental loads. If further information or guidance regarding cold-formed design practices is desired, please contact the manufacturer.

PINNACLE STRUCTURES. INC.

ENGINEERING double-lok®

Double-Lok® PANEL
12" Coverage

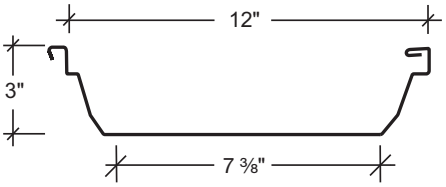

ALLOWABLE UNIFORM LOADS IN POUNDS PER SQUARE FOOT

24 Gauge (Fy = 50 KSI)								
SPAN TYPE	LOAD TYPE	SPAN IN FEET						
		2.5	3.0	3.5	4.0	4.5	5.0	5.5
SINGLE	LIVE	408.0	340.0	291.4	255.0	226.0	183.0	151.3
2-SPAN	LIVE	408.0	340.0	262.7	201.1	158.9	128.7	106.4
3-SPAN	LIVE	408.0	340.0	291.4	251.4	198.6	160.9	133.0
4-SPAN	LIVE	408.0	340.0	291.4	234.7	185.5	150.2	124.2

22 Gauge (Fy = 50 KSI)								
SPAN TYPE	LOAD TYPE	SPAN IN FEET						
		2.5	3.0	3.5	4.0	4.5	5.0	5.5
SINGLE	LIVE	593.9	494.9	424.2	371.9	293.9	238.0	196.7
2-SPAN	LIVE	593.9	494.9	377.5	289.0	228.4	185.0	152.9
3-SPAN	LIVE	593.9	494.9	424.2	361.3	285.5	231.2	191.1
4-SPAN	LIVE	593.9	494.9	424.2	337.4	266.6	215.9	178.4

NOTES:

1. **THE ABOVE LOADS ARE NOT FOR USE WHEN DESIGNING PANELS TO RESIST WIND UPLIFT.**
2. Strength calculations based on the 2012 AISI Standard *North American Specification for the Design of Cold-Formed Steel Structural Members.*
3. Allowable loads are applicable for uniform loading and spans without overhangs.
4. LIVE load capacities are for those loads that push the panel against its supports. The applicable limit states are flexure, shear, combined shear and flexure, web crippling at end and interior supports, and a deflection limit of L/180 under strenght-level loads.
5. Panel pullover and Screw pullout capacity must be checked separately using the screws employed for each particular application when utilizing this load chart.
6. The use of any field seaming equipment or accessories including but not limited to clips, fasteners, and support plates (eave, backup, rake, etc.) other than that provided by the manufacturer may damage panels, void all warranties and will void all engineering data.
7. This material is subject to change without notice. Please contact Pinnacle for the most current data.

The engineering data contained herein is for the expressed use of customers and design professionals. Along with this data, it is recommended that the design professional have a copy of the most current version of the *North American Specification for the Design of Cold-Formed Steel Structural Members* published by the American Iron and Steel Institute to facilitate design. This Specification contains the design criteria for cold-formed steel components. Along with the Specification, the designer should reference the most current building code applicable to the project jobsite in order to determine environmental loads. If further information or guidance regarding cold-formed design practices is desired, please contact the manufacturer.

SECTION 07 41 13
METAL ROOFING PANELS

PART 1 - GENERAL
1.1 SECTION INCLUDES
A. Trapezoidal-rib, seamed joint, standing seam metal roof panels, with related metal trim and accessories.

1.2 RELATED REQUIREMENTS
Specifier: If retaining this optional article, edit list below to correspond to Project.

A. Division 01 Section "Sustainable Design Requirements" for related LEED general requirements.
B. Division 05 Section "Structural Steel Framing" for structural steel framing supporting metal panels.
C. Division 05 Section "Steel Decking" for continuous metal decking supporting metal panels.
D. Division 05 Section "Cold-Formed Metal Framing" for cold-formed metal framing supporting metal panels.
E. Division 05 Section "Cold-Formed Metal Trusses" for cold-formed metal trusses supporting metal panels.
F. Division 06 Section "Sheathing" for sheathing substrate for metal roof panels.
G. Division 07 Section ["Thermal Insulation"] ["Roof Insulation"] for thermal insulation installed under metal panels.
H. Division 07 Section "Air Barriers" for air barriers within roof assembly and adjacent to roof assembly.
I. Division 07 Section "Metal Wall Panels" for factory-formed metal wall [and soffit] panels.
J. Division 07 Section "Sheet Metal Flashing and Trim" for formed sheet metal copings, flashings, reglets, and roof drainage items in addition to items specified in this Section.
K. Division 07 Section "Manufactured Roof Specialties" for manufactured copings, reglets, and roof drainage items in addition to items specified in this Section.
L. Division 07 Section "Joint Sealants" for field-applied joint sealants.
M. Division 13 Section "Metal Building Systems" for steel framing supporting metal panels.

1.3 REFERENCES
Specifier: If retaining this optional article, edit list below to correspond to Project.

A. American Architectural Manufacturer's Association (AAMA): www.aamanet.org:
   1. AAMA 621 - Voluntary Specifications for High Performance Organic Coatings on Coil Coated Architectural Hot Dipped Galvanized (HDG) & Zinc-Aluminum Coated Steel Substrates.
   2. AAMA 809.2 - Voluntary Specification Non-Drying Sealants.
B. American Society of Civil Engineers (ASCE): www.asce.org/codes-standards:
   1. ASCE 7 - Minimum Design Loads for Buildings and Other Structures.
C. ASTM International (ASTM): www.astm.org:
   1. ASTM A 653 - Specification for Steel Sheet, Zinc-Coated (Galvanized) or Zinc-Iron Alloy-Coated (Galvannealed) by the Hot-Dip Process.
   2. ASTM A 755 - Specification for Steel Sheet, Metallic Coated by the Hot-Dip Process and Prepainted by the Coil-Coating Process for Exterior Exposed Building Products.
   3. ASTM A 792/A 792M - Standard Specification for Steel Sheet, 55 % Aluminum-Zinc Alloy-Coated by the Hot-Dip Process.
   4. ASTM A 980 - Standard Specification for Steel, Sheet, Carbon, Ultra High Strength Cold Rolled.
   5. ASTM C 645 - Specification for Nonstructural Steel Framing Members.
   6. ASTM C 920 - Specification for Elastomeric Joint Sealants.
   7. ASTM D 1003 - Standard Test Method for Haze and Luminous Transmittance of Transparent Plastics.
   8. ASTM D 2244 - Test Method for Calculation of Color Differences from Instrumentally Measured Color Coordinates.
   9. ASTM D 4214 - Test Methods for Evaluating Degree of Chalking of Exterior Paint Films.
   10. ASTM E 1514 - Standard Specification for Structural Standing Seam Steel Roof Panel Systems.
   11. ASTM E 1592 - Standard Test Method for Structural Performance of Sheet Metal Roof and Siding Systems by Uniform Static Air Pressure Difference.
   12. ASTM E 1646 - Standard Test Method for Water Penetration of Exterior Metal Roof Panel Systems by Uniform Static Air Pressure Difference.
   13. ASTM E 1680 - Standard Test Method for Rate of Air Leakage Through Exterior Metal Roof Panel Systems.
   14. ASTM E 1980 - Practice for Calculating Solar Reflectance Index of Horizontal and Low-Sloped Opaque Surfaces.
D. Cool Roof Rating Council (CRRC): www.coolroofs.org/productratingprogram.html:
   1. CRRC-1-2008 - CRRC Product Rating program.
E. FM Global (FM): www.fmglobal.com:
   1. ANSI/FM 4471 - Approval Standard for Class 1 Panel Roofs.
F. International Accreditation Service (IAS):
   1. IAS AC 472 - Accreditation Criteria for Inspection

Programs for Manufacturers of Metal Building Systems, Part B.

G. Underwriters Laboratories, Inc. (UL): www.ul.com:
   1. UL 580 - Tests for Uplift Resistance of Roof Assemblies

H. US Environmental Protection Agency: www.energystar.gov/index.cfm:
   1. Energy Star Reflective Roof Products.

I. US Green Building Council (USGBC): www.usgbc.org:
   1. LEED - Leadership in Energy and Environmental Design (LEED) Green Building Rating Systems.

1.4 ADMINISTRATIVE REQUIREMENTS

A. Preinstallation Meeting: Prior to erection of framing, conduct preinstallation meeting at site attended by Owner, Architect, manufacturer's technical representative, inspection agency and related trade contractors.
   1. Coordinate building framing in relation to metal panel system.
   2. Coordinate openings and penetrations of metal panel system.
   3. Coordinate work of Division 07 Sections "Roof Specialties" and "Roof Accessories" and openings and penetrations and manufacturer's accessories with installation of metal panels.

1.5 QUALITY ASSURANCE

A. Manufacturer/Source: Provide metal roof panel assembly and accessories from a single manufacturer providing fixed-base roll forming, and accredited under IAS AC 472 Part B.

B. Manufacturer Qualifications: Approved manufacturer listed in this Section with minimum five years experience in manufacture of similar products in successful use in similar applications.

Specifier: Retain paragraph below if Owner allows substitutions but requires strict control over qualifying of substituted manufacturers.

   1. Approval of Comparable Products: Submit the following in accordance with project substitution requirements, within time allowed for substitution review:
      a. Product data, including certified independent test data indicating compliance with requirements.
      b. Samples of each component.
      c. Sample submittal from similar project.
      d. Project references: Minimum of five installations not less than five years old, with Owner and Architect contact information.
      e. Sample warranty.
      f. IAS AC 472 certificate.
   2. Substitutions following award of contract are not allowed except as stipulated in Division 01 General Requirements.
   3. Approved manufacturers must meet separate requirements of Submittals Article.

Specifier: Review of manufacturers' qualifying of installers is recommended for larger projects. Pinnacle requires Installer and supervisor certification when project requirements include extended warranty.

C. Installer Qualifications: Experienced Installer [certified by metal panel manufacturer] with minimum of five years experience with successfully completed projects of a similar nature and scope.
   1. Installer's Field Supervisor: Experienced mechanic [certified by metal panel manufacturer] supervising work on site whenever work is underway.

Specifier: Retain paragraph below and edit as appropriate for Federal projects and for public works projects utilizing Federal funds; consult with project Contracting Officer. Coordinate with Submittals Article.

D. Buy American Compliance: Materials provided under work of this Section shall comply with the following requirements:
   1. Buy American Act of 1933 BAA-41 U.S.C §§ 10a – 10d.
   2. Buy American provisions of Section 1605 of the American Recovery and Reinvestment Act of 2009 (ARRA).

1.6 ACTION SUBMITTALS

A. Product Data: Manufacturer's data sheets for specified products.

Specifier: Retain and edit below to comply with Project requirements for LEED or other sustainable design requirements.

B. LEED Submittals:
   1. Credit SS 7.2 Heat Island Effect - Roof: Product data indicating compliance with solar reflectance index requirement.
   2. Credit MR 4 Recycled Content: Product data indicating the following:
      a. Material costs for each product having recycled content.
      b. Percentages by weight of post-consumer and pre-consumer recycled content for each item.
      c. Total weight of products provided.

C. Shop Drawings: Show layouts of metal panels. Include details of each condition of installation, panel profiles, and attachment to building. Provide details at a minimum scale 1-1/2-inch per foot of edge conditions, joints, fastener and sealant placement, flashings, openings, penetrations, roof accessories, lightning arresting equipment, and special details. Make distinctions between factory and field assembled work.
   1. Indicate points of supporting structure that must coordinate with metal panel system installation.
   2. Include data indicating compliance with performance requirements.
   3. Include structural data indicating compliance with requirements of authorities having jurisdiction.

D. Samples for Initial Selection: For each exposed product specified including sealants. Provide representative color charts of manufacturer's full range of colors.
E. Samples for Verification: Provide 12-inch- (305 mm-) long section of each metal panel profile. Provide color chip verifying color selection.

1.7 INFORMATIONAL SUBMITTALS

A. Product Test Reports: Indicating compliance of products with requirements, witnessed by a professional engineer.
B. Qualification Information: For Installer firm and Installer's field supervisor.
C. IAS Accreditation Certificate: Indicating that manufacturer is accredited under provisions of IAS AC 472.

Specifier: Retain one or more of three paragraphs below when required for project.

D. Buy American Certification: Manufacturers' letters of compliance acceptable to authorities having jurisdiction, indicating that products comply with requirements.
E. Florida State Building Code Certificate.
F. Manufacturer's Warranty: Sample copy of manufacturer's standard warranty.

1.8 CLOSEOUT SUBMITTALS

A. Maintenance data.
B. Manufacturer's Warranty: Executed copy of manufacturer's standard warranty.

1.9 DELIVERY, STORAGE, AND HANDLING

A. Protect products of metal panel system during shipping, handling, and storage to prevent staining, denting, deterioration of components or other damage. Protect panels and trim bundles during shipping.
   1. Deliver, unload, store, and erect metal panel system and accessory items without misshaping panels or exposing panels to surface damage from weather or construction operations.
   2. Store in accordance with Manufacturer's written instructions. Provide wood collars for stacking and handling in the field.

1.10 COORDINATION

A. Coordinate sizes, profiles, and locations of roof curbs and other roof-mounted equipment and roof penetrations, based upon sizes of actual selected equipment.

1.11 WARRANTY

Specifier: Warranty terms below are available from Pinnacle. Verify that other allowable manufacturers furnish warranty meeting requirements.

A. Special Manufacturer's Warranty: On manufacturer's standard form, in which manufacturer agrees to repair or replace metal panel assemblies that fail in materials and workmanship within one year from date of Substantial Completion.

Specifier: Pinnacle's optional weathertightness warranties below are available for projects installed by an Pinnacle-certified installer under inspection by an Pinnacle field technical representative. Pinnacle representative can provide warranty cost estimate for desired combination of cost limitation and period of warranty desired by owner.

B. Special Weathertightness Warranty: On manufacturer's standard form, in which manufacturer agrees to repair or replace metal panel assemblies that fail to remain weathertight, including leaks, [without monetary limitation] [up to cost limitation of seven dollars ($7.00) per square foot of covered area] [up to cost limitation of fourteen dollars ($14.00) per square foot of covered area] within [5] [10] [15] [20] years from date of Substantial Completion.

Specifier: Confirm warranted values below for custom colors. Color fading for Pinnacle Brite-Red is warranted at 10 Hunter units, and chalking at No. 6 rating.

C. Special Panel Finish Warranty: On Manufacturer's standard form, in which Manufacturer agrees to repair or replace metal panels that evidence deterioration of factory-applied finish within [25] years from date of Substantial Completion, including:
   1. Fluoropolymer Two-Coat System:

Specifier: Confirm warranted performance values below for custom colors. Second options in subparagraphs below are for Pinnacle Brite-Red.

      a. Color fading in excess of [5] [10] Hunter units per ASTM D 2244.
      b. Chalking in excess of No. [8] [6] rating per ASTM D 4214.
      c. Failure of adhesion, peeling, checking, or cracking.
   2. Modified Silicone-Polyester Two-Coat System:

Specifier: Confirm warranted performance values below for custom colors. Second options in subparagraphs below are for Pinnacle Brite-Red. Pinnacle Polar White Polyester does not carry a warranty against chalking.

      a. Color fading in excess of [5] [7] Hunter units per ASTM D 2244, for vertical applications.
      b. Color fading in excess of [7] [10] Hunter units per ASTM D 2244, for non-vertical applications.
      c. Chalking in excess of No. [8] [7] rating per ASTM D 4214, for vertical applications.
      d. Chalking in excess of No. [6] [5] rating per ASTM D 4214, for non-vertical applications.
      e. Failure of adhesion, peeling, checking, or cracking.

PART 2 - PRODUCTS

2.1 MANUFACTURER

Specifier: Retain basis of design manufacturer and products listed in this Article where allowed. If inserting comparable manufacturers, carefully review products and engineering capabilities in relation to requirements of this Section, to ensure that other approved manufacturers offer products meeting Pinnacle's standards.

A. Basis of Design Manufacturer: Pinnacle Structures

1. Provide basis of design product[, or comparable product approved by Architect prior to bid].

2.2 PERFORMANCE REQUIREMENTS

A. General: Provide metal roof panel system meeting performance requirements as determined by application of specified tests by a qualified testing facility on manufacturer's standard assemblies.

Specifier: Recycled Content paragraph below describes calculation utilized for LEED-NC Credit MR 4. Modify as required to meet project recycled content requirements, or delete if recycled content requirements are stipulated solely in Division 01 Section "Sustainable Design Requirements."

B. Recycled Content: For Steel Products: Postconsumer recycled content plus one-half of preconsumer recycled content not less than [25] percent.

Specifier: Retain one or more radiative property performance subparagraphs below based on project requirements. Retain Solar Reflectance Index for LEED projects. Retain Energy Star reference for projects seeking Energy Star rating; products must be listed on EPA Energy Star website. Retain CRRC compliance for projects required to comply with CEC requirements. Verify values with manufacturer for selected panel finishes. Confirm that Energy Code requirements are also met by below.

C. Radiative Property Performance:
1. Solar Reflectance Index: Minimum 78 for roof slopes of 2:12 or less and 29 for roof slopes greater than 2:12 under medium wind conditions, per ASTM E 1980.
2. Energy Star Qualified: Listed on USDoE ENERGY STAR Roof Products Qualified Product List.
3. Energy Performance: Listed in CRRC Rated Product Directory, with minimum properties as required by applicable Energy efficiency or High-Performance Green Building standard.

D. System Performance: Comply with ASTM E 1514 and requirements of this Section.

E. Structural Performance: Provide metal panel assemblies capable of withstanding the effects of indicated loads and stresses within limits and under conditions indicated:

Specifier: Consult structural engineer and edit below as required by local codes. Insert structural data below if not indicated on drawings. Select applicable deflection limit.

1. Wind Loads: Determine loads based on uniform pressure, importance factor, exposure category, and basic wind speed indicated on drawings.
   a. Wind Uplift Testing: Certify capacity of metal panels by actual testing of proposed assembly per ASTM E 1592.
2. Snow Loads: [__ lbf/sq. ft. (___ Pa)] [As indicated].
3. Deflection Limits: Withstand inward and outward wind-load design pressures in accordance with applicable building code with maximum deflection of [1/120] [1/180] [1/240] of the span with no evidence of failure.
4. Seismic Performance: Comply with ASCE 7, Section 9, "Earthquake Loads."

F. Wind Uplift Resistance: Comply with UL 580 for wind-uplift class [UL-30] [UL-60] [UL-90].

Specifier: Retain FM Approvals' listing requirement for FM Global-insured projects or where FM Global requirements are used as minimum design standard. Select required windstorm classification based upon calculation method in FM Global Loss Prevention Data Sheet 1-28; note that FM Approvals' windstorm classification does not correlate directly to design wind speed.

G. FM Approvals Listing: Comply with FM Approvals 4471 as part of a panel roofing system, and that are listed in FM Approvals' "RoofNav" for Class 1 construction. Identify materials with FM Approvals markings.
1. Fire/Windstorm Classification: [Class 1A-60] [Class 1A-75] [Class 1A-90] [Class 1A-105].
2. Hail Resistance Rating: SH.

H. Florida State Building Code Compliance: Comply with requirements of Florida State Building Code. www.floridabuilding.org/pr/pr_app_srch.aspx

I. Air Infiltration, ASTM E 1680: Maximum 0.013 cfm/sq. ft. (0.07 L/s per sq. m) at static-air-pressure difference of 6.24 lbf/sq. ft. (300 Pa).

J. Water Penetration Static Pressure, ASTM E 1646: No uncontrolled water penetration at a static pressure of 12 lbf/sq. ft. (575 Pa).

K. Thermal Movements: Allow for thermal movements from variations in both ambient and internal temperatures. Accommodate movement of support structure caused by thermal expansion and contraction. Allow for deflection and design for thermal stresses caused by temperature differences from one side of the panel to the other.

2.3 METAL ROOF PANELS

A. Mechanically Seamed, Concealed Fastener, Trapezoidal Seam Metal Roof Panels: Structural metal roof panel consisting of formed metal sheet with raised trapezoidal ribs at panel edges, installed by lapping and mechanically interconnecting edges of adjacent panels, and attaching panels to supports using concealed clips and fasteners in a weathertight installation.
1. Basis of Design: Pinnacle Structures, Double-Lok.

Specifier: Material description below corresponds to BIEC International, Inc. http://galvalume.com/ Galvalume substrate, available Prepainted from Pinnacle. Second paragraph below describes Galvalume Plus with clear acrylic coating for use as exposed metallic finish.

2. Aluminum-Zinc Alloy-Coated Steel Sheet: ASTM A 792/A 792M, structural quality, Grade 50, Coating Class AZ50 (Grade 340, Coating Class AZM150), prepainted by the coil-coating process per ASTM A 755/A 755M.
3. Aluminum-Zinc Alloy-Coated Steel Sheet: ASTM A 792/A 792M, structural quality, Grade 50, Coating

Class AZ55 (Grade 340, Coating Class AZM165) unpainted Galvalume Plus coating.

Specifier: Prior to selecting metal thickness and panel thickness below, consult manufacturer's span tables and review selection against panel thickness requirements and span condition. Select appropriate panel configuration to meet requirements of design wind pressure. Important: Consult this document when specifying gauge with the intent that it meet a prescriptive decimal thickness requirement in addition to strength performance requirements. Metal panels do not provide diaphragm strength for building stability.

a. Nominal Thickness: [26 gage] [24 gage] [22 gage] coated thickness.
b. Panel Surface: [Smooth with minor ribs in pan] [Stucco embossed with striations in pan].
c. Exterior Finish: [Modified silicone-polyester two-coat system] [Fluoropolymer two-coat system] [Fluoropolymer two-coat metallic color system] [Exposed Galvalume Plus coating].
d. Color: [As indicated] [As selected by Architect from manufacturer's standard colors] [Match Architect's custom color].

4. Panel Width: [12 inches (305 mm)] [18 inches (457 mm)] [24 inches (610 mm)].
5. Panel Seam Height: 3 inch (76 mm).
6. Joint Type: Double folded.

2.4 METAL ROOF PANEL ACCESSORIES

A. General: Provide complete metal roof panel assembly incorporating trim, copings, fasciae, gutters and downspouts, and miscellaneous flashings, in [manufacturer's standard profiles] [profiles as indicated]. Provide required fasteners, closure strips, splice plates, support plates, and sealants as indicated in manufacturer's written instructions.
B. Flashing and Trim: Match material, thickness, and finish of metal panel face sheet.
C. Two Piece Floating Clips: ASTM C 645, with ASTM A 653/A 653M, G90 (Z180) hot-dip galvanized zinc coating, configured for concealment in panel joints, and identical to clips utilized in tests demonstrating compliance with performance requirements.
D. Panel Fasteners: Self-tapping screws and other acceptable corrosion-resistant fasteners recommended by roof panel manufacturer. Where exposed fasteners cannot be avoided, supply fasteners with EPDM or neoprene gaskets, and heads matching color of metal panels by means of factory-applied coating.
E. Joint Sealers: Manufacturer's standard or recommended liquid and preformed sealers and tapes, and as follows:
   1. Factory-Applied Seam Sealant: Manufacturer's standard hot-melt type.
   2. Tape Sealers: Manufacturer's standard non-curing butyl tape, AAMA 809.2.

Specifier: Retain one or more of the following four optional paragraphs as required by Project.

F. Steel Sheet Miscellaneous Framing Components: ASTM C 645, with ASTM A 653/A 653M, G60 (Z180) hot-dip galvanized zinc coating.
G. Light Transmitting Panel: Manufacturer's standard UV-resistant translucent panel, 24 inch (610 mm) wide, white, with haze value of not less than 90 percent when measured per ASTM D 1003.
H. Roof Accessories: Approved by metal roof panel manufacturer. Refer to Section 07 72 00 "Roof Accessories" for requirements for roof accessories.
I. Snow Guards: Approved by metal roof panel manufacturer. Refer to Section 07 72 53 "Snow Guards" for requirements for snow guards attached to metal roof panels.

2.5 FABRICATION

A. General: Provide factory fabricated and finished metal panels and accessories meeting performance requirements, indicated profiles, and structural requirements.
B. Fabricate metal panel joints configured to accept factory-applied sealant providing weathertight seal and preventing metal-to-metal contact and minimizing noise resulting from thermal movement.
C. Form panels in continuous lengths for full length of detailed runs, except where otherwise indicated on approved shop drawings.
D. Sheet Metal Flashing and Trim: Fabricate flashing and trim to comply with manufacturer's written instructions, approved shop drawings, and project drawings. Form from materials matching metal panel substrate and finish.

2.6 FINISHES

A. Finishes, General: Prepare, pretreat, and apply coating to exposed metal surfaces to comply with coating and resin manufacturers' written instructions.

Specifier: Retain one or more of the following three finish paragraphs as applicable to the project. Coordinate with Warranty article in Part 1.

B. Modified Silicone-Polyester Two-Coat System: 0.20 – 0.25 mil primer with 0.7 – 0.8 mil color coat[, meeting solar reflectance index requirements].
   1. Basis of Design: Pinnacle, Signature 200.

Specifier: Pinnacle's fluoropolymer coatings are based on Arkema, Inc. Kynar 500 and Solvay Solexis Hylar 500 PVF2 resins.

C. Fluoropolymer Two-Coat System: 0.2 – 0.3 mil primer with 0.7 - 0.8 mil 70 percent PVDF fluoropolymer color coat, AAMA 621[, meeting solar reflectance index requirements].
   1. Basis of Design: Pinnacle, Signature 300.
D. Fluoropolymer Two-Coat Metallic System: 0.2 – 0.3 mil primer with 0.7 - 0.8 mil 70 percent PVDF metallic fluoropolymer color coat, AAMA 621[, meeting solar reflectance index requirements].
   1. Basis of Design: Pinnacle, Signature 300 Metallic.
E. Interior Finish: 0.5 mil total dry film thickness consisting of primer coat and wash coat of manufacturer's standard light-colored acrylic or polyester backer finish.

PART 3 - EXECUTION

3.1 EXAMINATION

A. Examine metal panel system substrate and supports with Installer present. Inspect for erection tolerances and other conditions that would adversely affect installation of metal panel installation.
   1. Inspect metal panel support substrate to determine if support components are installed as indicated on approved shop drawings. Confirm presence of acceptable supports at recommended spacing to match installation requirements of metal panels.
   2. Panel Support Tolerances: Confirm that panel supports are within tolerances acceptable to metal panel system manufacturer but not greater than the following:
      a. 1/4 inch (6 mm) in 20 foot (6.1 m) in any direction.
      b. 3/8 inch (9 mm) over any single roof plane.

B. Correct out-of-tolerance work and other deficient conditions prior to proceeding with insulated metal roof panel system installation.

3.2 PREPARATION

A. Miscellaneous Supports: Install subframing, girts, furring, and other miscellaneous panel support members according to ASTM C 754 and manufacturer's written instructions.

B. Flashings: Provide flashings as required to complete metal roof panel system. Install in accordance with Section 07 62 00 "Sheet Metal Flashing and Trim" and approved shop drawings.

3.3 METAL PANEL INSTALLATION

A. Mechanically-Seamed, Trapezoidal Standing Seam Metal Roof Panels: Install weathertight metal panel system in accordance with manufacturer's written instructions, approved shop drawings, and project drawings. Install metal roof panels in orientation, sizes, and locations indicated, free of waves, warps, buckles, fastening stresses, and distortions. Anchor panels and other components securely in place. Provide for thermal and structural movement.

B. Attach panels to supports using clips, screws, fasteners, and sealants recommended by manufacturer and indicated on approved shop drawings.
   1. Fasten metal panels to supports with concealed clips at each location indicated on approved shop drawings, with spacing and fasteners recommended by manufacturer.
   2. Seamed Joint: Crimp standing seams with manufacturer-approved, motorized seamer tool so clip, metal roof panel, and factory-applied sealant are completely engaged.
   3. Provide weatherproof jacks for pipe and conduit penetrating metal panels of types recommended by manufacturer.
   4. Dissimilar Materials: Where elements of metal panel system will come into contact with dissimilar materials, treat faces and edges in contact with dissimilar materials as recommended by manufacturer.

3.4 ACCESSORY INSTALLATION

A. General: Install metal panel trim, flashing, and accessories using recommended fasteners and joint sealers, with positive anchorage to building, and with weather tight mounting. Provide for thermal expansion. Coordinate installation with flashings and other components.
   1. Install components required for a complete metal panel assembly, including trim, copings, flashings, sealants, closure strips, and similar items.
   2. Comply with details of assemblies utilized to establish compliance with performance requirements and manufacturer's written installation instructions.
   3. Provide concealed fasteners except where noted on approved shop drawings.
   4. Set units true to line and level as indicated. Install work with laps, joints, and seams that will be permanently weather resistant.

B. Joint Sealers: Install joint sealers where indicated and where required for weathertight performance of metal panel assemblies, in accordance with manufacturer's written instructions.
   1. Prepare joints and apply sealants per requirements of Division 07 Section "Joint Sealants."

3.5 FIELD QUALITY CONTROL

Specifier: Retain paragraph below and edit options when scope and complexity of metal roof panel installation justifies independent inspection and testing provisions.

A. Testing Agency: [Owner will engage] [Engage] an independent testing and inspecting agency acceptable to Architect to perform field tests and inspections and to prepare test reports.

3.6 CLEANING AND PROTECTION

A. Remove temporary protective films immediately in accordance with metal roof panel manufacturer's instructions. Clean finished surfaces as recommended by metal roof panel manufacturer.

B. Replace damaged panels and accessories that cannot be repaired to the satisfaction of the Architect.

END OF SECTION

PINNACLE™ STRUCTURES. INC.

double-lok® GENERAL INFORMATION

GENERAL INFORMATION

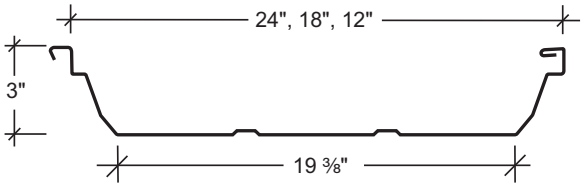

Coverage Width - 24" with minor ribs - prepunched 6 holes
18" with minor ribs - prepunched 5 holes
12" no minor ribs - no punching

Minimum Slope - ¼" : 12

Panel Attachment - Low, high (sliding)

Panel Substrate - Galvalume Plus® (standard)

Gauge - Standard: 24 Optional: 22

Finishes - Smooth or embossed with minor ribs

Coatings - Signature® 200, Signature® 300, Signature® 300 Metallic

PRODUCT SELECTION CHART

FINISH	Signature® 300		Signature® 300 Metallic		Signature® 200		Galvalume Plus®	
PRODUCT	24 Gauge	22 Gauge	24 Gauge	22 Gauge	24 Gauge	22 Gauge	24 Gauge	22 Gauge
Double-Lok®								
24" Wide	❑	❑	❑	❑	❑	❑	●	❑
18" Wide	●	❑	❑	❑	●	❑	●	❑
12" Wide	❑	❑	❑	❑	❑	❑	●	❑

Signature® is a registered trademark of NCI Group, Inc. Galvalume Plus® is a registered trademark of BIEC International

●- Available in any quantity.

❑- Minimum quantity may be required.

Signature® 200 White only 24 Gauge is available in all widths, at any quantity.
Other colors, finishes, gauges, and materials available; please inquire.

CAUTION

Diaphram capabilities and purlin stability are not provided by the **Double-Lok®** roof system. Therefore, other bracing may be required to conform to A.I.S.C. or A.I.S.I. specifications.

PINNACLE™ STRUCTURES. INC.

GENERAL INFORMATION double-lok®

PRODUCT CHECKLIST

Double-Lok® 24" Panel

- 24 or 22 gauge
- Factory-applied mastic
- Pre-punched

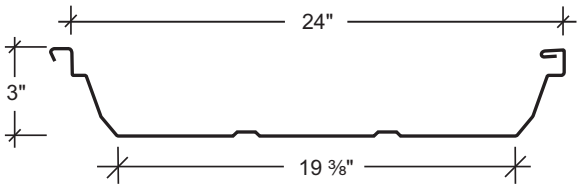

❑

Double-Lok® 18" Panel

- 24 or 22 gauge
- Factory-applied mastic
- Pre-punched

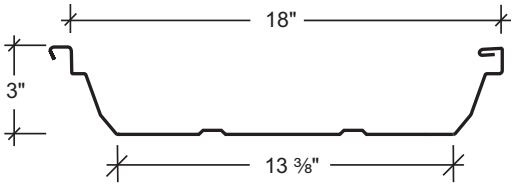

❑

Double-Lok® 12" Panel

- Termination panel for odd footage buildings

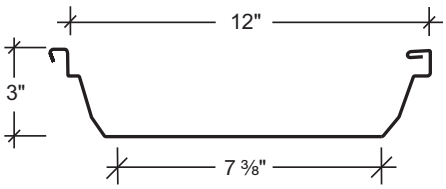

❑

2" Standoff, Sliding Clip (Hi-Thermal)

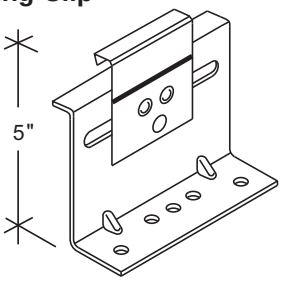

*** 1 1/4" Travel in each direction**

HW-2129 ❑

2" Sliding Clip, Low

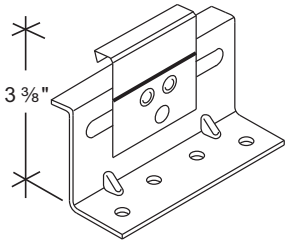

HW-2122 ❑

2" Sliding Clip, High

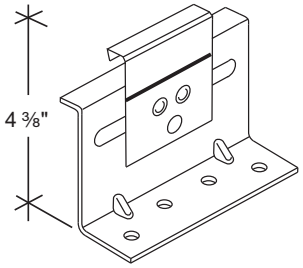

*** 1 1/4" Travel in each direction**

HW-2124 ❑

4" Sliding Clip, Low

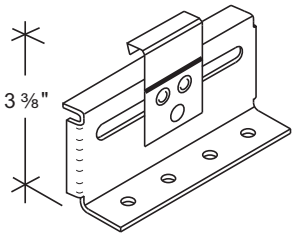

HW-2126 ❑

4" Sliding Clip, High

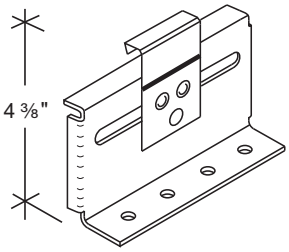

*** 2" Travel in each direction**

HW-2128 ❑

*Total clip movement should be calculated for each project based on the anticipated temperature differential of the area in which the project is located.

PINNACLE™ STRUCTURES. INC.

double-lok® GENERAL INFORMATION

PRODUCT CHECKLIST

Eave Plate, Low (Optional)

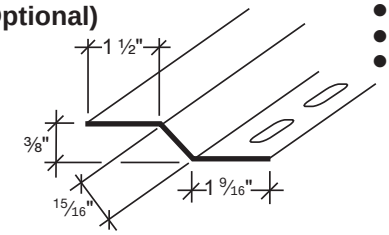

- 8'-0" length
- 14 gauge painted
- Factory slots
- For use with high clips

HW-7600 ❑

Eave Plate, High

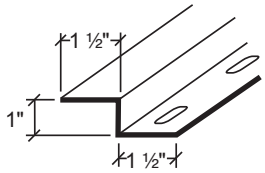

- 8'-0" length
- 14 gauge painted
- Factory slots
- For use with high clips

HW-7616 ❑

Floating Eave Plate, Low

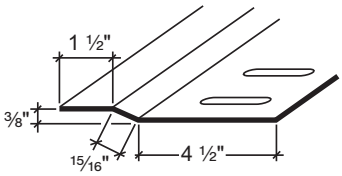

- 8'-0" length
- 14 gauge painted
- Use at eave when attaching panels to substructure at midpoint

HW-7617 ❑

Floating Eave Plate, High

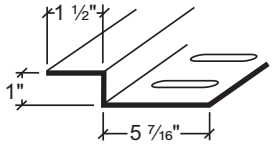

- 8'-0" length
- 14 gauge painted
- Use at eave when attaching panels to substructure at midpoint

HW-7618 ❑

4" Floating Eave Plate, Low

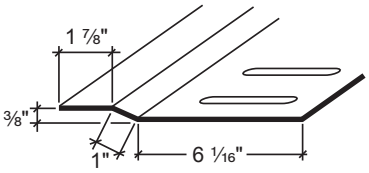

- 8'-0" length
- 14 gauge painted
- Use at eave when attaching panels to substructure at midpoint

HW-7628 ❑

4" Floating Eave Plate, High

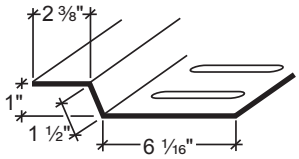

- 8'-0" length
- 14 gauge painted
- Use at eave when attaching panels to substructure at midpoint

HW-7629 ❑

Mid-Slope Fixed Plate, Low

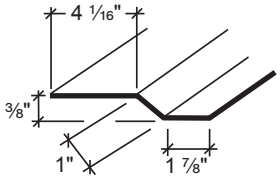

- 6'-0" length
- 14 gauge painted
- Use as mid-point endlap when attaching panels to substructure at midpoint

HW-7632 ❑

Mid-Slope Fixed Plate, High

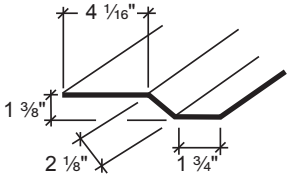

- 6'-0" length
- 14 gauge painted
- Use as mid-point endlap when attaching panels to substructure at midpoint

HW-7636 ❑

Rake Support, Low

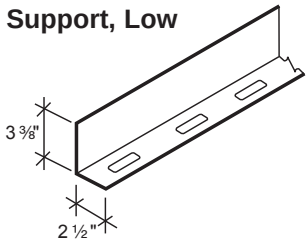

- 20'-0" length
- 14 gauge painted
- Factory slots
- For use with low clips

HW-7710 ❑

Rake Support, High

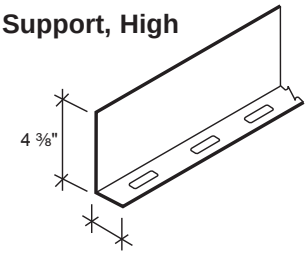

- 20'-0" length
- 14 gauge painted
- Factory slots
- For use with high clips

HW-7720 ❑

PINNACLE™ STRUCTURES, INC.

GENERAL INFORMATION double-lok®

PRODUCT CHECKLIST

Eave Plate, 2" Standoff

- 8'-0" length 2" Standoff Rake Support
- 14 gauge painted
- Use with Double-Lok® roof system only
- Use with 2" sliding Hi-Thermal clips only

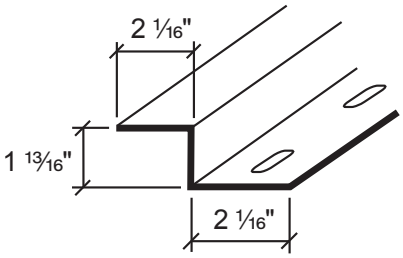

HW-7661 ❑

Floating Eave Plate, 2" Standoff

- 8'-0" length
- 14 gauge
- Use with Double-Lok® roof system only
- Mandatory - Use with 2" Sliding Hi-Thermal Clips

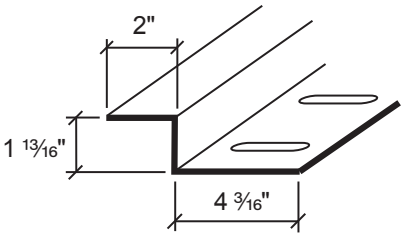

HW-7663 ❑

Mid-Slope Fixed Plate, 2" Standoff

- 8'-0" length
- 14 gauge
- Use with Double-Lok® roof system only
- Mandatory - Use with 2" Sliding Hi-Thermal Clips

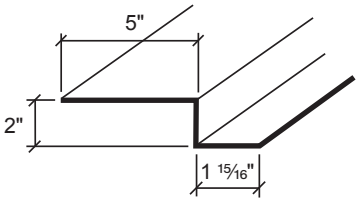

HW-7662 ❑

Rake Support, 2" Standoff

- 20'-0" length
- 14 gauge painted
- Use with Double-Lok® roof system only
- Use with 2" sliding Hi-Thermal clips only

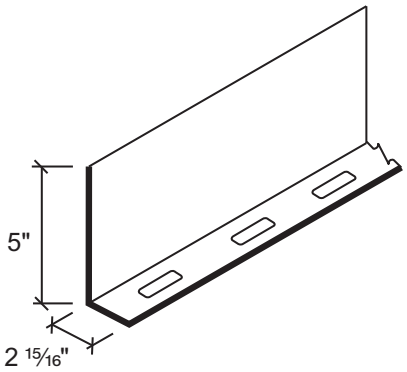

HW-7664 ❑

Ultra-Dek® AND Double-Lok® CLIP ALIGNMENT STRAP

- Use with 24" panel widths only

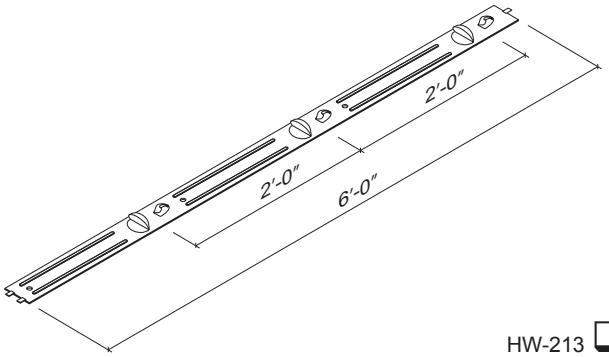

HW-213 ❑

Back-up Plate

- For use at endlaps and at the ridge
- Pre-punched
- 16 gauge prepainted

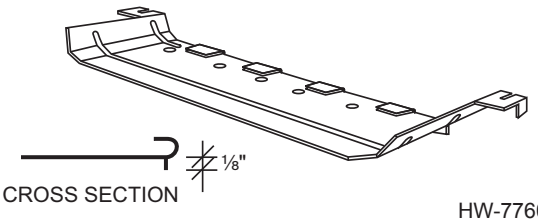

HW-7760 (24") ❑

HW-7769 (18") ❑

HW-7761 (12") ❑

*** 12" Back-up plate is not pre-punched.**

Outside Closure (24", 18" or 12")

- For use at ridge, or high eave
- 24 gauge
- Painted to match roof color

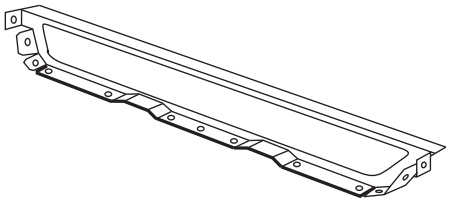

HW-430 (24") ❑

HW-432 (18") ❑

HW-442 (12") ❑

12" Closure has no minor ribs.

PINNACLE™ STRUCTURES. INC.

double-lok® GENERAL INFORMATION

PRODUCT CHECKLIST

Light Transmitting Panel, UL 90 ‡
Double-Lok® (24" wide) Reinforced/UV Resistant Acrylit

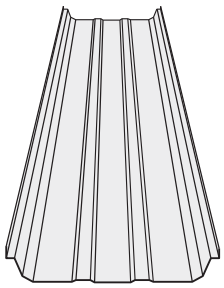

10'-3" LONG

Field Installed LTP Kit

Uninsulated - HW-1472 ❑

Insulated - HW-1473 ❑

Light Transmitting Panel, UL 90 ‡
Double-Lok® (24" wide) Reinforced/UV Resistant Acrylit

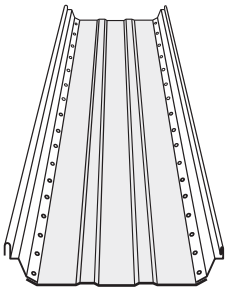

10'-3" LONG

Riveted Rail LTP

Uninsulated - HW-1446D ❑

Insulated - HW-1445D ❑

Tape Sealer

- Used at the eave plate, eave strut, outside closures, endlaps and trim connections

Tri-Bead $^{3}/_{16}$" x $^{7}/_{8}$" x 25' - HW-504 ❑

- Used at valleys and roof curbs

Triple Bead $^{3}/_{16}$" x 2 $^{7}/_{8}$" x 20' - HW-502 ❑

Urethane Sealant

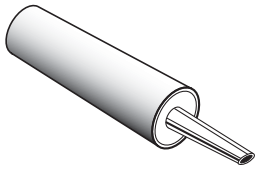

White - HW-540 ❑

Gray - HW-541 ❑

Bronze - HW-542 ❑

S-5!™ Double-Lok® Wind Clamp

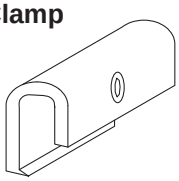

- Use at clip locations to provide additional panel uplift capacity.
- **Clamp usage to be determined by a registered professional engineer.**

HW-569 ❑

Thermal Spacer

- Polystyrene block used to increase the insulation capacity along the purlins

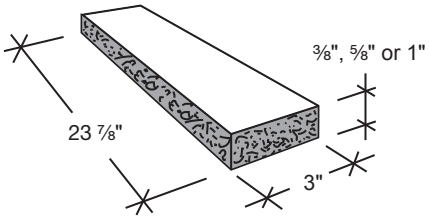

HW-575 (1") ❑

HW-576 ($^{5}/_{8}$") ❑

HW-577 ($^{3}/_{8}$") ❑

Tape Sealer - Minor Rib Pre-Cut Beveled

- Used to fill void at minor ribs of the panel at the eave and valleys

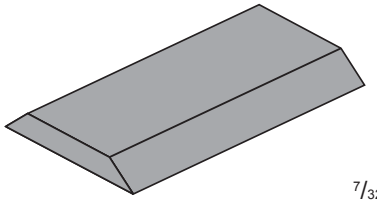

$^{7}/_{32}$" x 1 $^{3}/_{8}$" x 4" - HW-512 ❑

Inside Closure

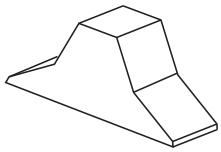

EPDM

- Special applications

HW-428 ❑

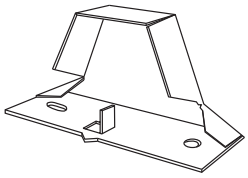

METAL

- 18 gauge Galvalume®
- For use at eave

HW-426 ❑

Double Faced Tape

- 1 $^{1}/_{2}$" x 180' rolls Used to hold insulation in place at the rake, eave, and at any insulation end splices

HW-522 ❑

‡ It is the user's responsibility to ensure that the installation and use of all light transmitting panels comply with State, Federal and OSHA regulations and laws, including, but not limited to, guarding all light transmitting panels with screens, fixed standard railings, or other acceptable safety controls that prevent fall-through.

GENERAL INFORMATION double-lok®

PRODUCT CHECKLIST

Floating Peak Box

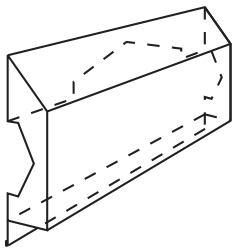

Note: For use with Ridge Flash FL-200, FL-202, FL-213, FL-214, FL-300, FL-540, or FL-541 FL-125* ❑

Note: For use with Ridge Flash FL-200, FL-202, FL-213, FL-214, FL-300, FL-540, or FL-541 FL-126* ❑

***Includes cinch angles and flexible membrane.**

Sculptured Eave Trim

● Specify Roof Pitch

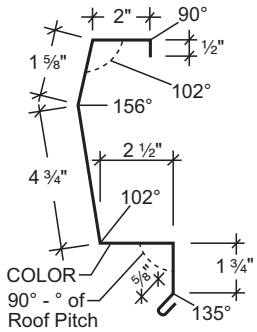

Specify Roof Pitch

(10'-2") FL-250 ❑

Gutter

● Specify Roof Pitch

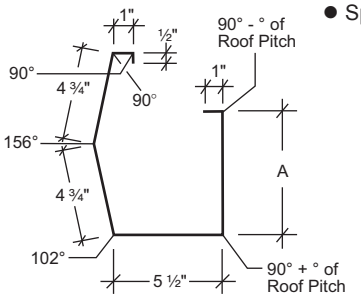

ROOF PITCH	DIM. A	PART NO
1/4" - 4:12	6 5/16"	FL-240A ❑
1/4" - 4:12	6 5/16"	FL-241A ❑
4 1/4" - 6:12	6 15/16"	FL-240B ❑
4 1/4" - 6:12	6 15/16"	FL-241B ❑

Rake Trim

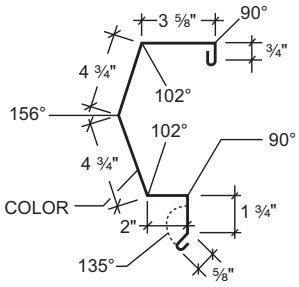

FL-110 ❑

High Side Eave Trim

● Specify Roof Pitch

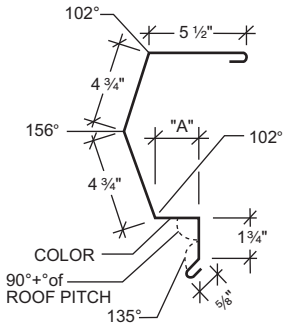

ROOF PITCH	DIM. A	PART NO
1/4" - 1 3/4":12	2"	FL-265 ❑
2" - 4":12	3 11/16"	FL-265B ❑

Ridge Flashing

● Specify Roof Pitch

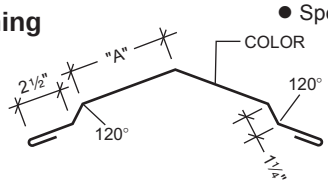

ROOF PITCH	DIM. A	NOTE	PART NO
1/4" - 2 1/2":12	6 1/2"	For use without ventilator 24" Peak purlin spacing	FL-213 ❑
2 9/16" - 4":12	7 1/2"		FL-214 ❑
1/4" - 2 1/2":12	10 1/4"	For use with 9" ventilator 32" Peak purlin spacing	FL-205 ❑
2 9/16" - 4":12	11"		FL-207 ❑

PINNACLE STRUCTURES, INC.

double-lok® GENERAL INFORMATION

PRODUCT CHECKLIST

Gutter Strap

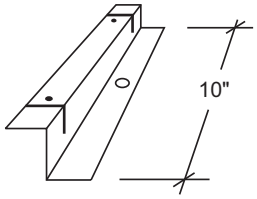

FL-246 ❑

Ridge End Cap

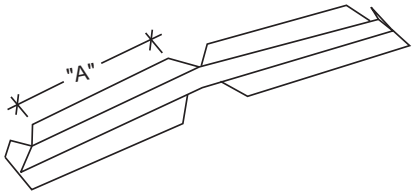

● Specify Roof Pitch

FL-204 ❑

Perforated Vent Drip

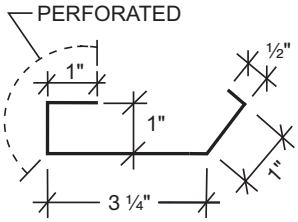

FL-254 ❑

Sculptured Eave Corner Box

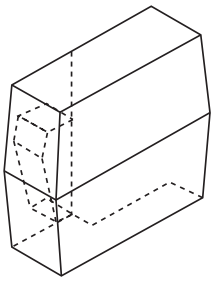

FL-132 ❑

Rake Slide

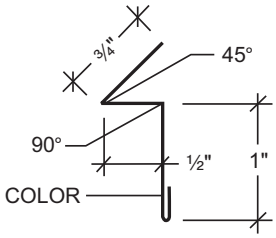

FL-115 ❑

Variable Termination

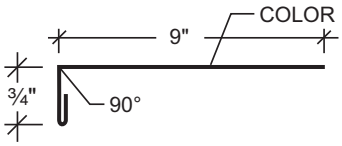

FL-117 ❑

Mitered Sculptured Rake (Left or Right)

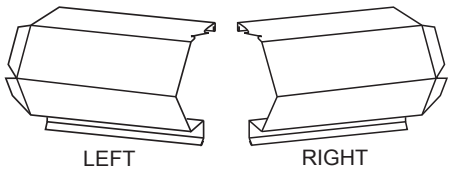

FL-110 ❑

Light Transmitting Panel Trim

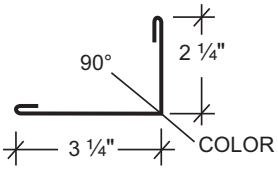

FL-568 ❑

Box Panel Cap Trim

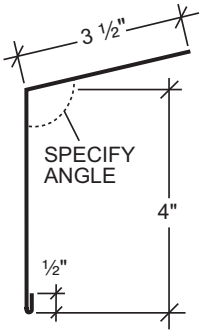

FL-272 ❑

Mitered Sculptured High Side Eave (Right or Left)

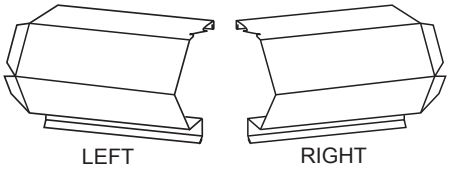

● Specify Roof Pitch

FL-265 ❑

Mitered Sculptured Gutter (Right or Left)

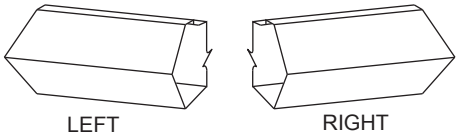

● Specify Roof Pitch

FL-240 ❑

Offset Panel Cap Trim

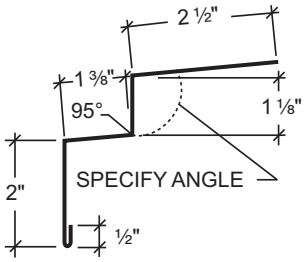

● Specify Roof Pitch

FL-271 ❑

PINNACLE™ STRUCTURES. INC.

GENERAL INFORMATION double-lok®

PRODUCT CHECKLIST

Standard Valley — All Systems

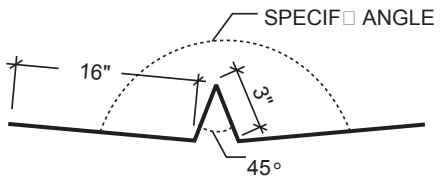

FL-700 ❑

Extended Valley — All Systems

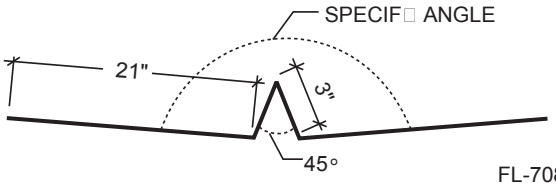

FL-708 ❑

Valley Support Plate — Low Systems

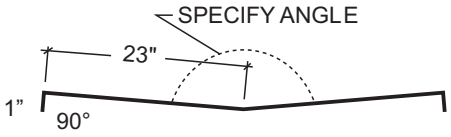

● Extended Valleys

P-111 ❑

Valley Support Plate — High Systems

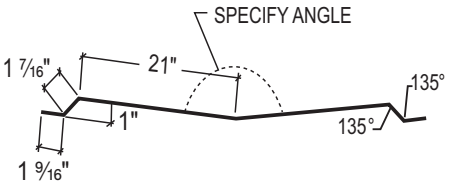

● Standard and Extended Valleys

P-162 ❑

Valley Support Plate — Low Systems

● Standard Valleys

P-101 ❑

Valley Support Plate — 2" Standoff Systems

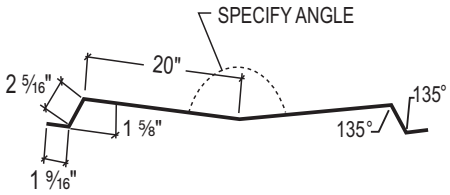

● Standard and Extended Valleys

P-163 ❑

Hip Support Plate

P-141 ❑

Parapet Rake Cleat

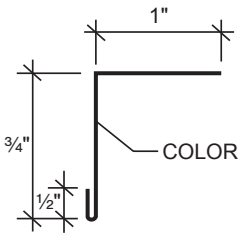

FL-290 ❑

Parapet High Side Eave Flash

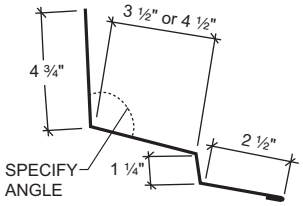

FL-274 (4 1/2") ❑

FL-275 (3 1/2") ❑

Parapet Rake Flash

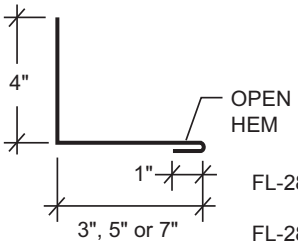

FL-285 (3") ❑

FL-286 (5") ❑

FL-287 (7") ❑

Counter Flash

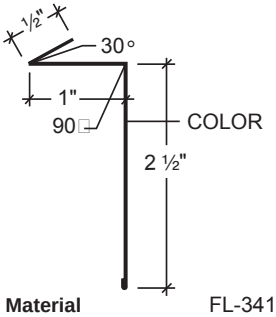

24 Gauge Material

FL-341 ❑

Alternate Counter Flash

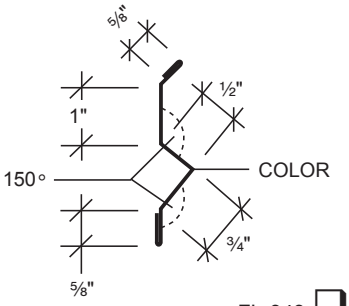

24 Gauge Material

FL-343 ❑

PINNACLE™ STRUCTURES. INC.

double-lok® GENERAL INFORMATION

PRODUCT CHECKLIST

Fastener #1

- Clip to purlin with up to 4" insulation thickness
- Eave plate to eave strut
- Inside closure to eave plate or eave strut
- Rake support to purlin (Fixed System Only)

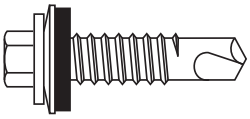

1/4"-14 x 1" Self Driller
5/16" Hex Washer Head with 5/8" O. D. washer

❑

Fastener #1E

- Panel to eave plate or eave strut
- Rake trim to roof panel
- Outside closure
- Endlap

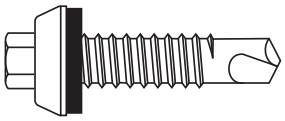

1/4"-14 x 1 1/4" Long Life Self Driller
5/16" Hex Washer Head with sealing washer
(Long life exterior fastener)

❑

Fastener #1F

- Clip to purlin with over 4" insulation thickness

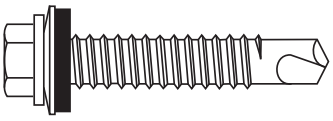

1/4"-14 x 1 1/2" Self Driller
5/16" Hex Washer Head with 5/8" O.D. washer

❑

Fastener #2A

- Use in place of Fasteners #1E and #4 at all stripouts

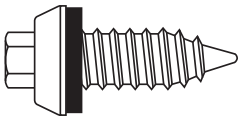

17 x 1" Type AB Long Life
5/16" Hex Washer Head with sealing washer
(Long life exterior fastener)

❑

Fastener #4

- Ridge and other flashing to outside closure
- Gutter to panel
- Gutter to strap
- Trim to trim connections

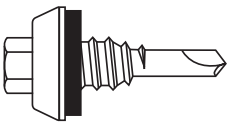

1/4"-14 x 7/8" Lap Tek® Long Life Self Driller
5/16" Hex Washer Head with sealing washer
(Long life exterior fastener)

❑

Fastener #5

- Rake support to purlin (Floating System Only)
- Floating eave plate to eave strut

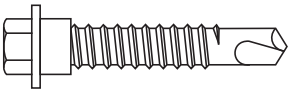

1/4"-14 x 1 1/4" Shoulder Tek® 2 Self Driller
5/16" Hex Washer Head, no washer

❑

Fastener #6

- Clip to joist
- Eave plate to beam
- Rake support to joist
- (Fixed System Only)

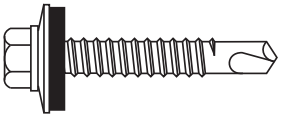

12-24 x 1 1/4" TEK® 4.5 Self Driller
5/16" Hex Washer Head with
5/8" O.D. washer

❑

Fastener #8

- Special application fastener
- For use on 2x4 lath and other solid wood deck (Not for use in plywood)

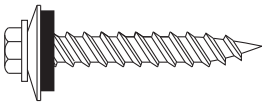

10 x 1 1/2" Woodgrip
1/4" Hex Washer Head with
1/2" O.D. washer

❑

PINNACLE™ STRUCTURES. INC.

GENERAL INFORMATION double-lok®

PRODUCT CHECKLIST

Fastener #9

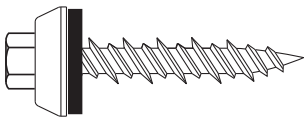

- Special application fastener
- For use on 2x4 lath and other solid wood deck (Not for use in plywood)

10 x 1 1/2" Long Life Woodgrip
5/16" Hex Washer Head with sealing washer
(Long life exterior fastener)

❑

Fastener #10

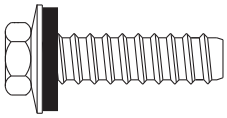

- Special application fastener
- For use on structural steel up to 1/2" thick
- Requires pre-drilled hole

1/4"-14 x 1" Type B
3/8" Hex Washer Head with
5/8" O.D. washer

❑

Fastener #11

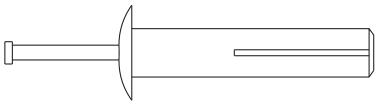

- Special application fastener
- For use on masonry

1/4" x 1 1/4" Nail Drive
Masonry Anchor

❑

Fastener #12A

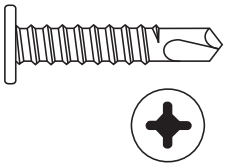

- Support plate to purlins at valley and hip conditions
- Rake angle to purlins

12 x 1" Pancake Head Self Driller
#2 Quadrex Drive

❑

Fastener #14

- Gutter strap to snow gutter

1/8" x 3/16" Stainless Steel Pop Rivet

❑

Fastener #14A

- Snow gutter to eave plate
- Outside closure to back-up angle at hip condition

1/8" x 3/8" Stainless Steel Pop Rivet

❑

Fastener #46

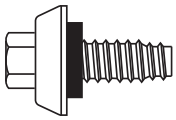

- Special Application Fastener
- Endlap over solid deck or rigid insulation

1/4"-14 x 5/8" Long Life Type B
5/16" Hex Washer Head with Sealing Washer

❑

Fastener #43L

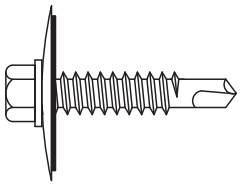

- Use at down slope end lap of LTPS

1/4"-14 x 1 1/4" Long Life Self Driller
5/16" Hex Washer Head with 1 1/8" O.D. Washer

❑

Fastener #226

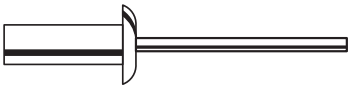

- Dekstrip to expansion ridge/expansion lap

3/16" x 9/16" Aluminum Closed End Rivet

Fastener #228

- Dekstrip to expansion ridge/expansion lap
- Used with Fastener #226

PREPARATORY REQUIREMENTS

1. A single pitch eave strut must be used with the **Double-Lok®** roof system.
2. Make sure a rake angle or an alternate structural flat surface has been installed on top of the purlins to accept the "Rake Support".
3. The walls do not have to be erected before the roof is installed. However, for the purpose of this manual, we have assumed that the wall panels have been installed.
4. All primary and secondary framing must be erected, plumbed and squared with bolts tightened according to accepted building practices.
5. The substructure (eave to ridge) must be on plane (1/4" in 20' or 3/8" in 40' tolerance).
6. **Double-Lok®** can be erected on various types of construction. However, for the purpose of this manual, we have assumed that the roof will be installed on a new, pre-engineered metal building.
7. **Double-Lok®** roof panels can be furnished in 24", 18", and 12" widths. However, for the purpose of this manual, we have assumed that the roof panels will be 24" wide.
8. It is critical that the purlins or joists at the ridge and endlaps be exactly located as detailed and that they are straight from rafter to rafter. Any mislocation or bowing of these members can cause the fasteners at the endlaps or outside closures to foul as the panels expand and contract. Oil canning is not a cause for rejection.
9. Peak purlin spacing - 24" (12" from the centerline of the building).
10. **If your roof is to be UL 90 rated, see special UL 90 requirements on page DL-4.**
11. Read recommended erection practices on pages DL-53 – DL-55 before proceeding with roof installation.
12. **Pinnacle recommends the use of a screw gun with a speed range of 0 - 2000 RPM to properly install all fasteners referenced in this manual. Tools rated to 4000 RPM should never be used for self drilling fasteners typically supplied with metal building components.**
13. Field cutting of the panels should be avoided where possible. If field cutting is required, the panels must be cut with nibblers, snips, or shears to prevent edge rusting. **Do not cut the panels with saws, abrasive blades, grinders, or torches.**

NOTE

It is the responsibility of the erector to install this roof using safe construction practices that are in compliance with OSHA regulations. Pinnacle is not responsible for the performance of this roof system if it is not installed in accordance with the instructions shown in this manual. Deviations from these instructions and details must be approved in writing by Pinnacle.

CAUTION

Diaphragm capabilities and purlin stability are not provided by Pinnacle's Double-Lok® roof system. Therefore, other bracing may be required.

CAUTION

The minimum recommended slope for the roof system is 1/4 on 12. A slope of less than 1/4 on 12 could cause severe ponding and will void material warranties.

CAUTION

Application and design details are for illustration purposes only, and may not be appropriate for all environmental conditions or building designs. Projects should be engineered to conform to applicable building codes, regulations, and accepted industry practices.

WARNING: Light transmitting panels are not designed or intended to bear the weight of any person walking, stepping, standing or resting on them. PINNACLE DISCLAIMS ANY WARRANTY OR REPRESENTATION, EXPRESS OR IMPLIED, that any person can safely walk, step, stand or rest on or near these light transmitting panels or that they comply with any OSHA regulation.

GENERAL INFORMATION

double-lok®

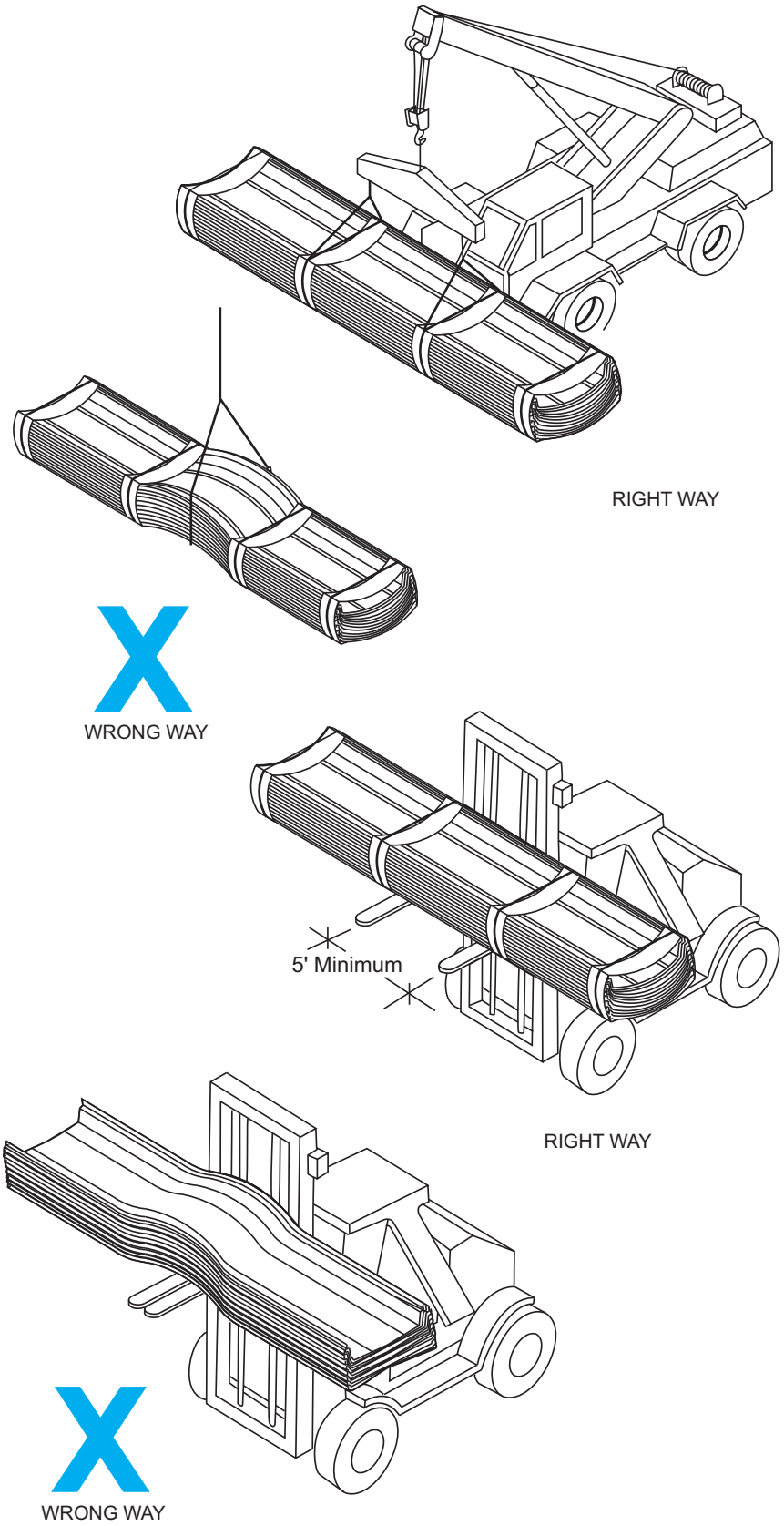

UNLOADING

Upon receiving material, check shipment against shipping list for shortages and damages. P.S.I.will not be responsible for shortages or damages unless they are noted on the shipping list.

Each bundle should be lifted at its center of gravity. Where possible, bundles should remain banded until final placement on roof. If bundles must be opened, they should be retied before lifting.

When lifting bundles with a crane, a spreader bar and nylon straps should be used. **NEVER USE WIRE ROPE OR CHAIN SLINGS. THEY WILL DAMAGE THE PANELS**.

When lifting bundles with a forklift, forks must be a minimum of five feet apart. Do not transport open bundles. Drive slowly when crossing rough terrain to prevent panel buckling.

CAUTION

Improper unloading and handling of bundles and crates may cause bodily injury or material damage. The manufacturer is not responsible for bodily injuries or material damages during unloading and storage.

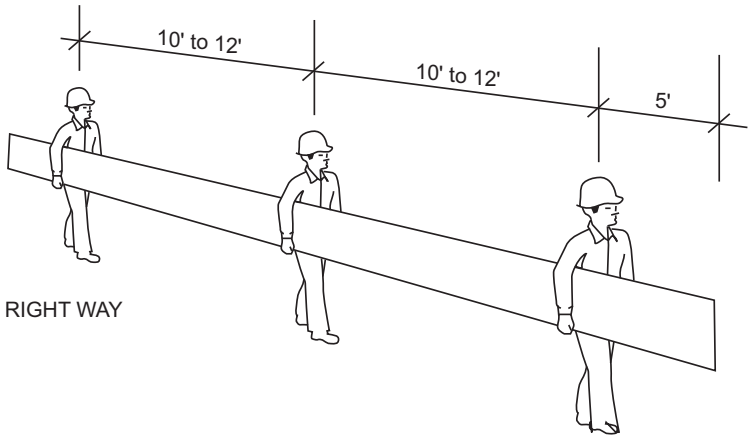

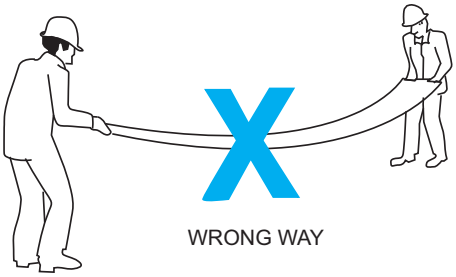

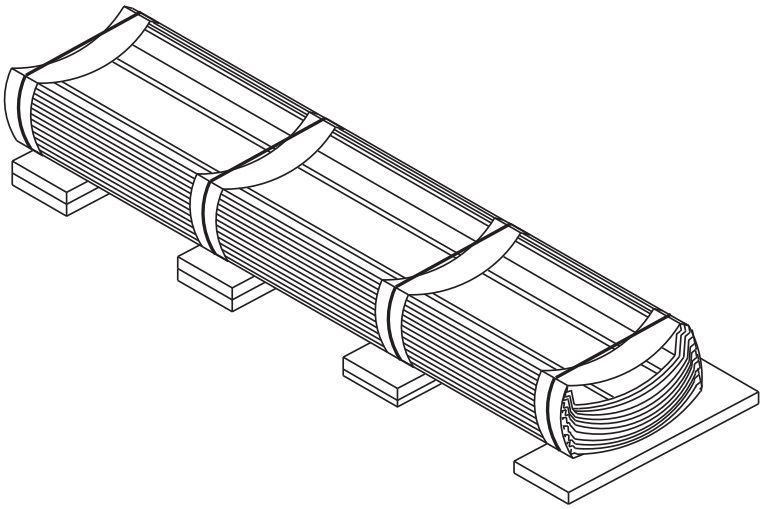

HANDLING/ PANEL STORAGE

Standing on one side of the panel, lift it by the seam. If the panel is over 10' long, lift it with two or more people on one side of the panel to prevent buckling.

Do not pick panels up by the ends.

NOTE

Protective gloves should always be used while handling panels. OSHA safety regulations must be followed at all times.

Store bundled sheets off the ground sufficiently high to allow air circulation beneath bundle and to prevent rising water from entering bundle. Slightly elevate one end of bundle. Prevent rain from entering bundle by covering with tarpaulin, making provision for air circulation between draped edges of tarpaulin and the ground. **PROLONGED STORAGE OF SHEETS IN A BUNDLE IS NOT RECOMMENDED**. If conditions do not permit immediate erection, extra care should be taken to protect sheets from white rust or water marks.

Check to see that moisture has not formed inside the bundles during shipment. If moisture is present, panels should be uncrated and wiped dry, then restacked and loosely covered so that air can circulate between the panels.

BAND ONLY

This method is used on all orders, unless otherwise specified by customer. The panels are banded together, causing them to curl up. This enhances the strength of the bundles. Panels bundled in this manner may be handled by a forklift in lengths to 30'. The forklift should have at least 5' between forks. Lengths in excess of 30' must be lifted utilizing a spreader bar. Special care must be given during handling to avoid damage to the locking edges of the panels.

ERECTION SEQUENCE

double-lok®

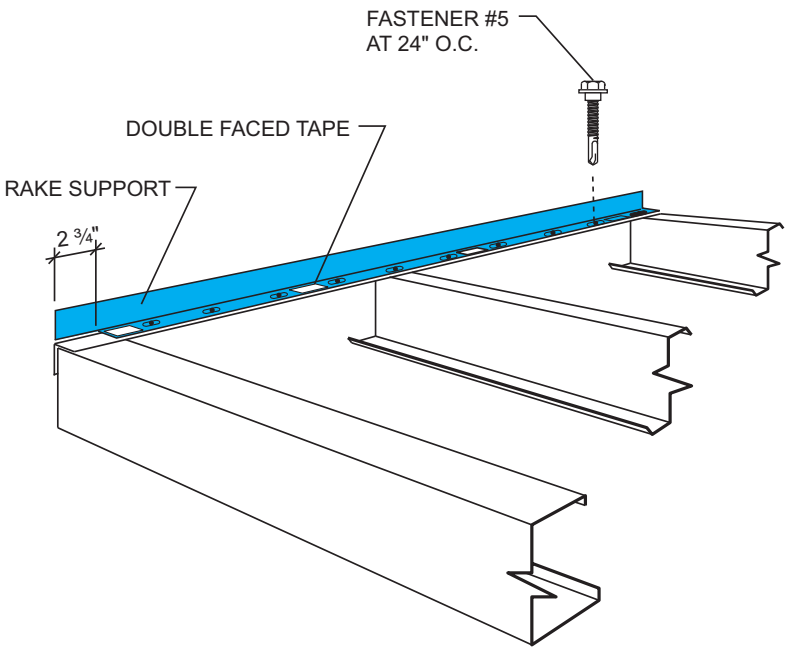

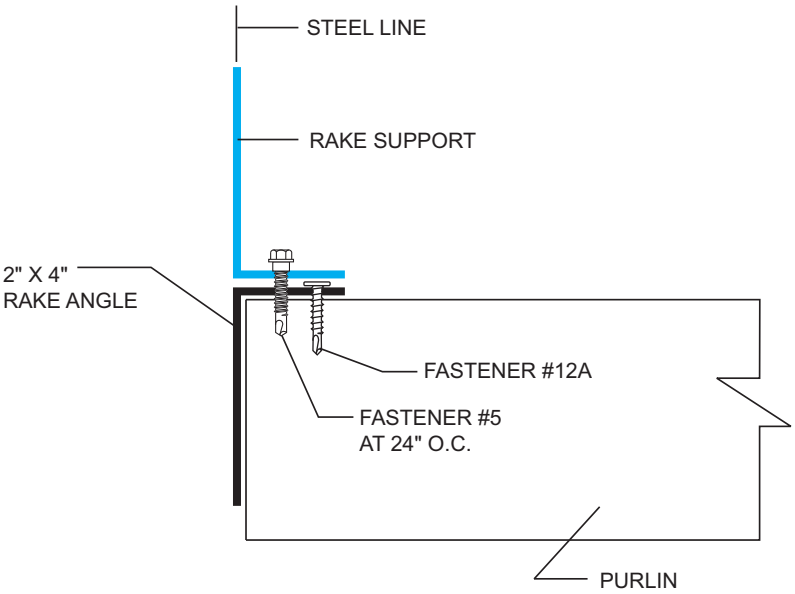

STEP 1

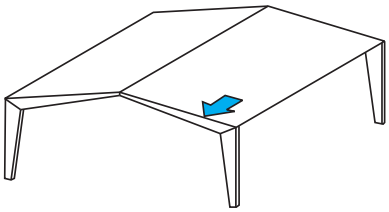

RAKE SUPPORT

Attach the rake support on top of the rake angle with Fastener #5 on 2'-0" centers with a fastener in the first and last prepunched slot. The vertical leg is to be installed flush with the steel line. Center fasteners in slots.

IT IS IMPORTANT THAT THE RAKE SUPPORT IS INSTALLED STRAIGHT AND SQUARE WITH THE EAVE AS IT CONTROLS THE ALIGNMENT OF THE ROOF SYSTEM.

Install 6" long pieces of double faced tape on 3'-0" centers to the top of the horizontal leg of the rake support. This will help hold the insulation in place at the rake.

CAUTION

It is important that shoulder fasteners are installed through the CENTER of the slotted holes of the rake support to allow for expansion and contraction. If installing into joist it must be pre-drilled.

CAUTION

ALL PRIMARY AND SECONDARY FRAMING SHOULD BE ERECTED, PLUMBED, AND BOLTS TIGHTENED PRIOR TO SHEETING.

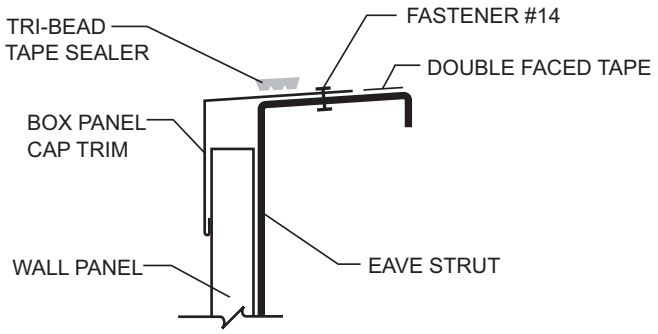

WALL PANEL INSTALLED BEFORE ROOF

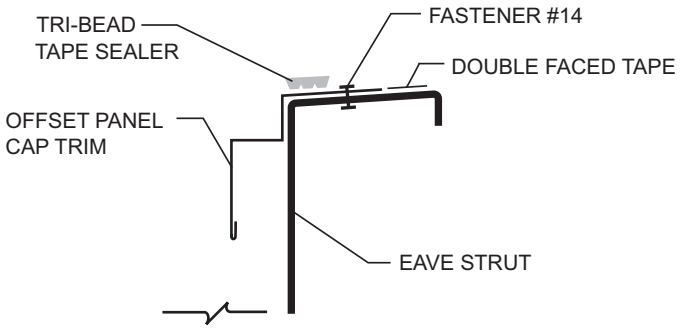

WALL PANEL INSTALLED BEFORE OR AFTER ROOF

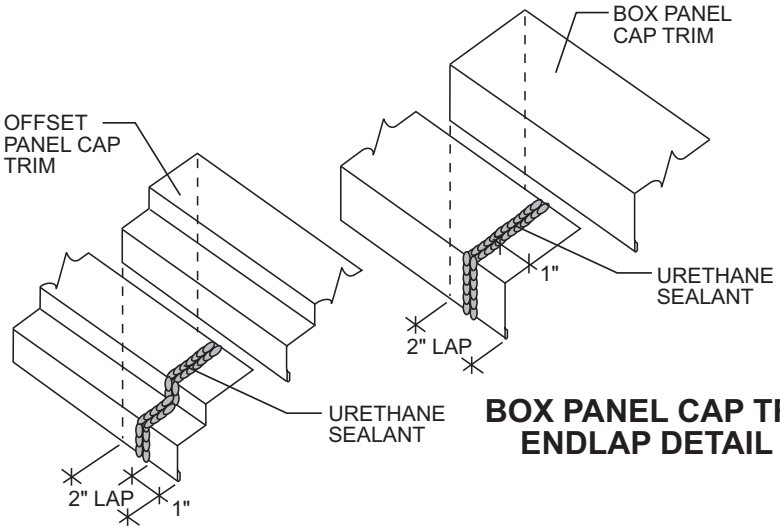

BOX PANEL CAP TRIM ENDLAP DETAIL

OFFSET PANEL CAP TRIM ENDLAP DETAIL

STEP 2

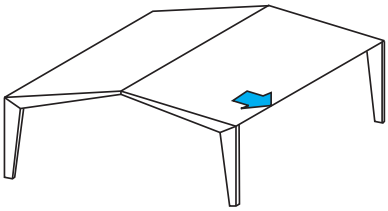

LOW SYSTEM EAVE

For applications in which the wall panels have already been erected, install box panel cap trim to the eave strut with Fastener #14. Trim must be pulled tight to wall panels before fastening to eave strut. Use two fasteners per 10' piece or three fasteners per 20' piece. For applications in which the wall panels have not been erected, use offset panel cap trim.

Lay Tri-Bead tape sealer on top of the panel cap trim (box or offset).

Install double faced tape along the length of the top leg of the panel cap trim (box or offset). Double faced tape must be upslope from Tri-Bead tape sealer.

Lap box or offset panel cap trim 2". Apply two beads of urethane sealant between the trim pieces, approximately 1" from the end of the bottom piece.

ERECTION SEQUENCE double-lok®

STEP 2A

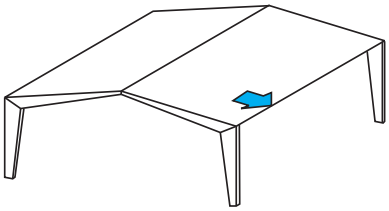

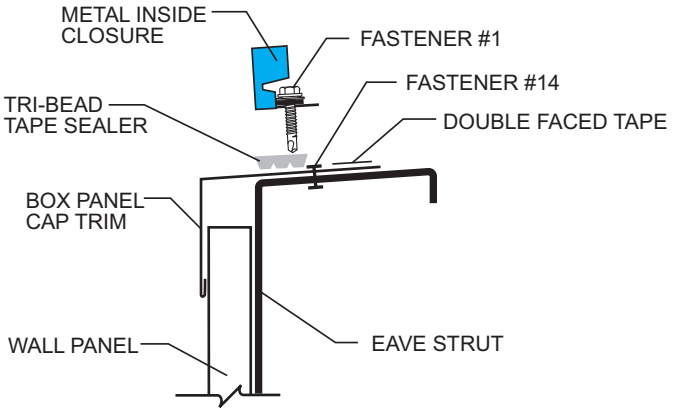

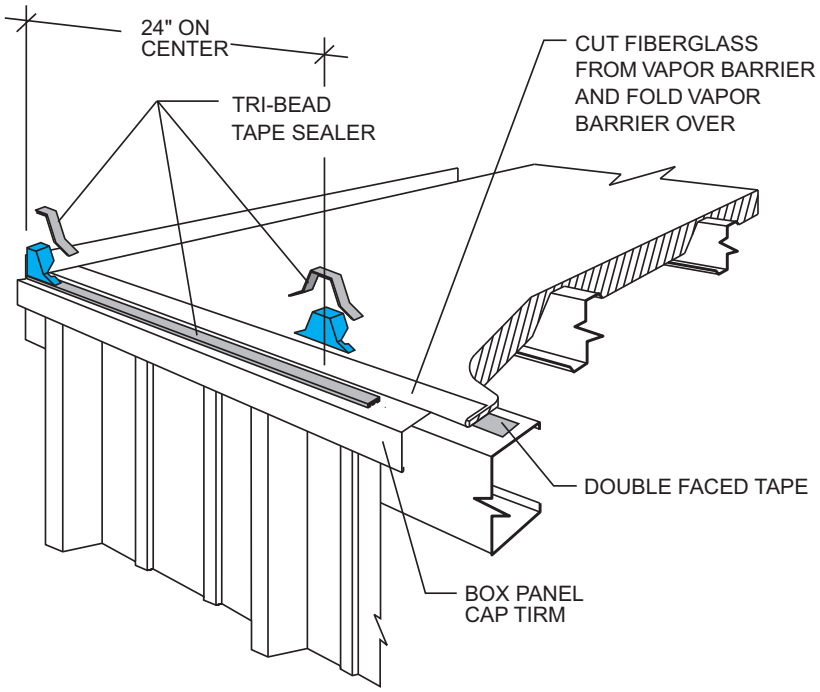

LOW SYSTEM EAVE/ METAL INSIDE CLOSURE

Using Fastener #1, attach the first inside closure to the eave strut, locating the face of the inside closure with the steel line. **NOTE THAT THE FIRST INSIDE CLOSURE MUST BE FIELD CUT IN HALF TO FILL THE VOID UNDER THE PARTIAL RIB.**

Locate additional closures on 24" centers from the first closure to maintain panel module, attaching each with Fastener #1. Install two fasteners per closure. The first fastener should be installed through the slotted hole to allow for any adjustment that may be required. Place Tri-Bead tape sealer on the top and side of each closure to complete the seal at the eave. These may be pre-taped before installation. **To maintain panel module, metal inside closures must be installed on 24" centers. Measure from tab to tab located on the metal inside closure.**

Roll out insulation from eave to peak, laying the side of the insulation on top of the rake support. The first roll should be 3' wide. This will keep insulation sidelaps 1' from panel sidelaps. Allow approximately 4" of insulation to hang past the double faced tape (downslope) before sticking the insulation to the double faced tape. Cut and remove the fiberglass approximately 4" and fold the vapor barrier back over the insulation (upslope).

CAUTION

The fiberglass insulation must not interfere with the Tri-Bead tape sealer which provides a positive seal at the eave.

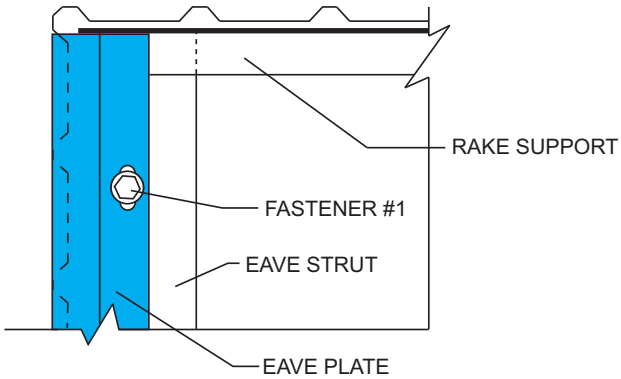

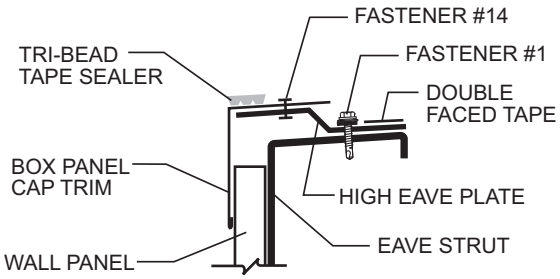

WALL PANEL INSTALLED BEFORE ROOF

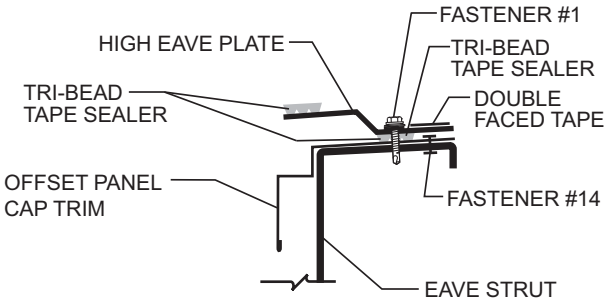

WALL PANEL INSTALLED BEFORE OR AFTER ROOF

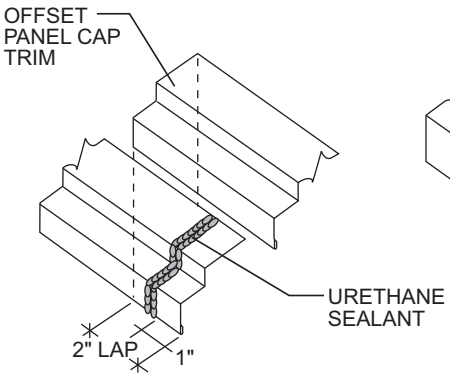

OFFSET PANEL CAP TRIM ENDLAP DETAIL

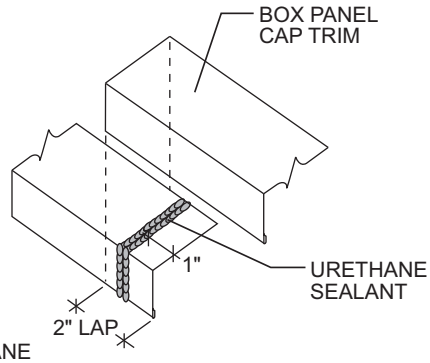

BOX PANEL CAP TRIM ENDLAP DETAIL

STEP 2B

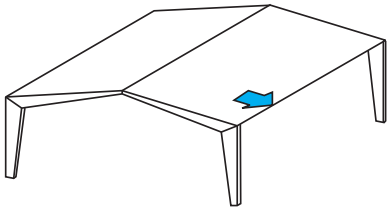

HIGH SYSTEM EAVE

WALL PANELS INSTALLED BEFORE ROOF

Install high eave plates flush with the outside of the high crowns of the wall panels. Install Fastener #1 in prepunched slot (1'-0" on center) of the eave plate. **The first eave plate will butt against the rake support**. You may install all of the eave plates at this time.

Install box panel cap trim to the top of the eave plates with Fastener #14. Use two fasteners per 10' piece and three fasteners per 20' piece. Trim must be pulled tight to wall panels before fastening to eave plates.

Lay Tri-Bead tape sealer across the top of the box panel cap trim, flush with the outside edge. Install double faced tape along the length of the top leg of the box panel cap trim. Double faced tape must be upslope from the Tri-Bead tape sealer.

WALL PANELS INSTALLED AFTER ROOF

Install offset panel cap trim to eave strut with Fastener #14. Use two fasteners per 10' piece and three fasteners per 20' piece.

Install high eave plates flush with the outside of the offset panel cap trim. Install Fastener # 1 in each prepunched slot (1'-0" on center) of the eave plate. **The first eave plate will butt against the rake support**. You may install all of the eave plates at this time.

Lay Tri-Bead tape sealer across the top of the eave plates, flush with the outside edge. Install double faced tape along the length of the bottom leg of the eave plate.

TRIM LAPS

Lap box or offset panel cap trim 2". Apply two beads of urethane sealant between the trim pieces, approximately 1" from the end of the bottom piece.

ERECTION SEQUENCE double-lok®

STEP 2C

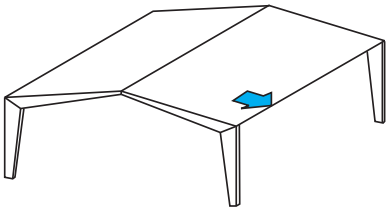

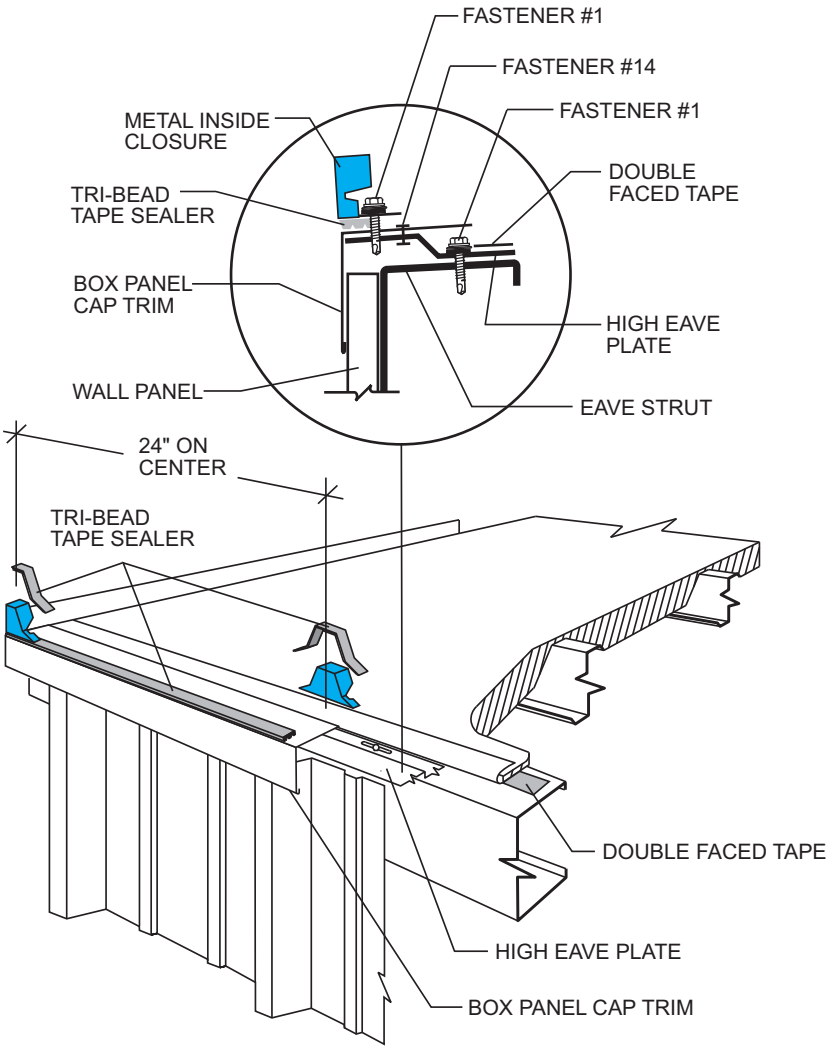

HIGH SYSTEM EAVE/METAL INSIDE CLOSURE

Using Fastener #1, attach the first inside closure to the eave plate, locating the face of the inside closure with the downslope edge of the eave plate. **NOTE THAT THE FIRST INSIDE CLOSURE MUST BE FIELD CUT IN HALF TO FILL THE VOID UNDER THE PARTIAL RIB.**

Locate additional closures on 24" centers from the first closure to maintain panel module, attaching each with Fastener #1. Install two fasteners per closure. The first fastener should be installed through the slotted hole to allow for any adjustment that may be required. Place Tri-Bead tape sealer on the top and side of each closure to complete the seal at the eave. These may be pre-taped before installation. **To maintain panel module, metal inside closures must be installed on 24" centers. Measure from tab to tab located on the metal inside closure.**

Roll out insulation from eave to peak, laying the side of the insulation on top of the rake support. The first roll should be 3' wide. This will keep insulation sidelaps 1' from panel sidelaps. Allow approximately 4" of insulation to hang past the double faced tape (downslope) before sticking the insulation to the double faced tape. Cut and remove the fiberglass approximately 4" and fold the vapor barrier back over the insulation (upslope).

CAUTION

The fiberglass insulation must not interfere with the Tri-Bead tape sealer which provides a positive seal at the eave.

double-lok® ERECTION SEQUENCE

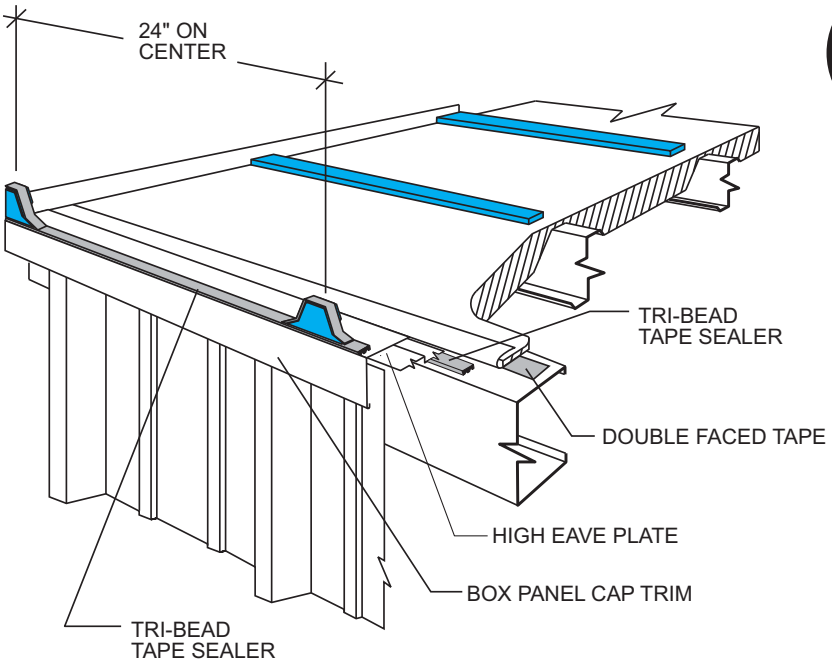

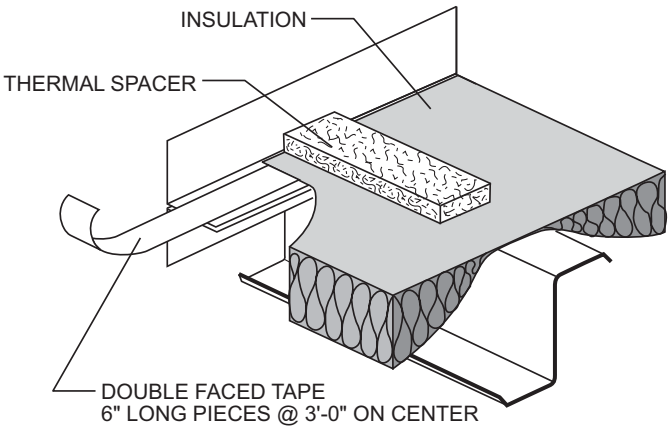

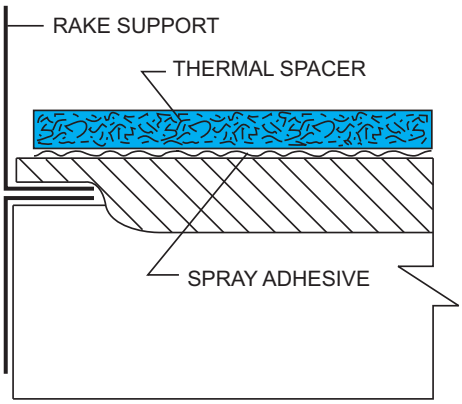

STEP 3

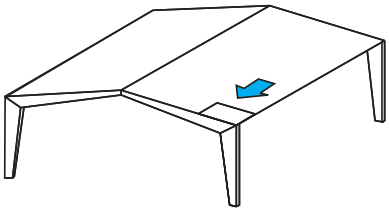

THERMAL SPACER

(FOR HIGH SYSTEM ONLY)

Position the thermal spacer on top of the insulation over each purlin and against the rake support prior to installing the roof panel.

Using spray adhesive, (not by Pinnacle) adhere the thermal spacer to the insulation. The thermal spacer increases the insulation capacity along the purlins.

ERECTION SEQUENCE

double-lok®

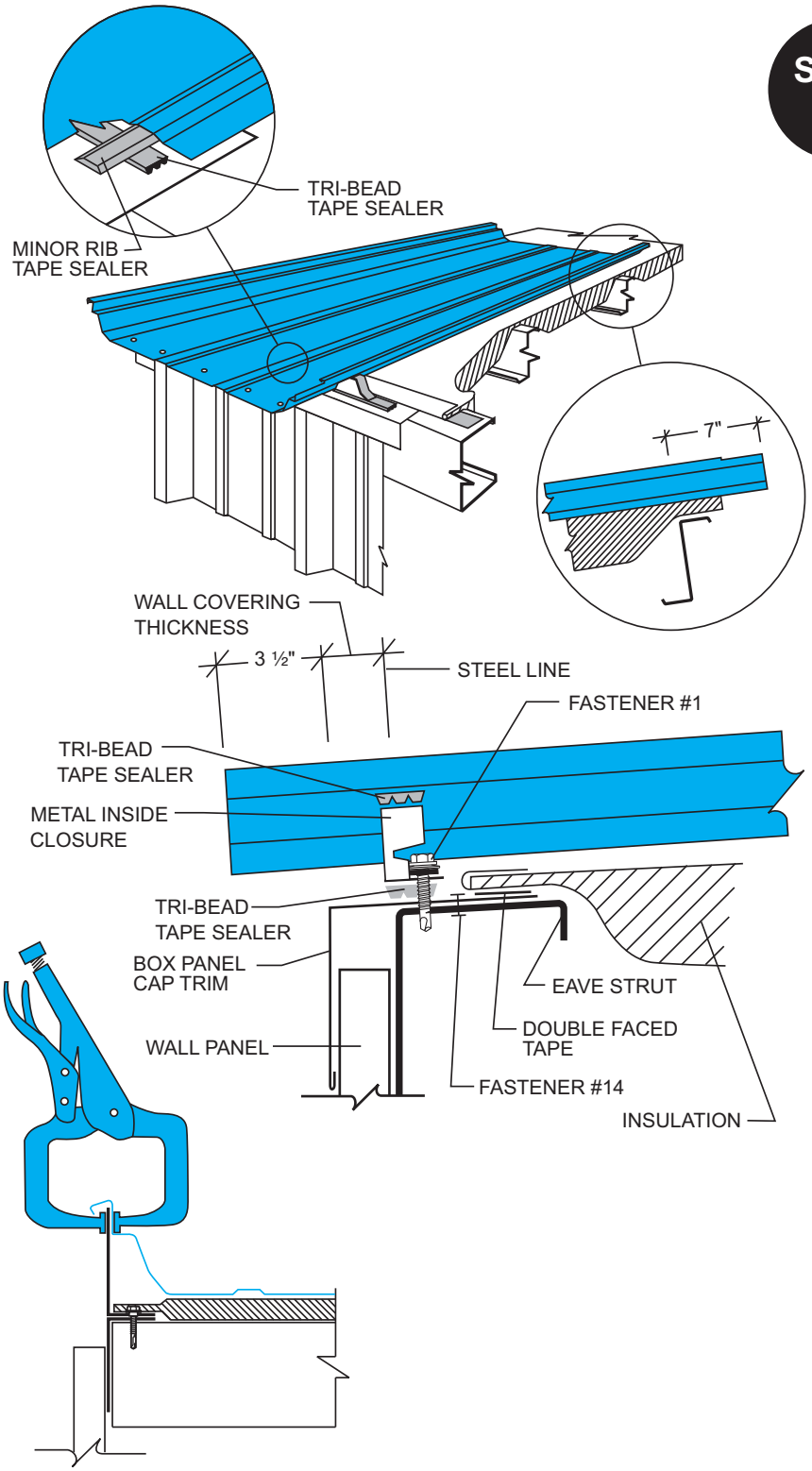

STEP 4

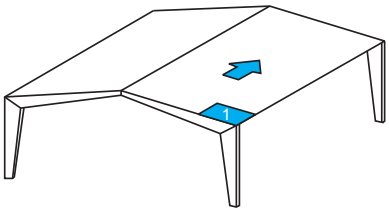

FIRST PANEL

Apply minor rib tape sealer to the underside of the minor ribs of the panel. Position so that this tape sealer will cross the Tri-Bead tape sealer on the eave trim (for low system) or on the high eave plate (for high systems) when panel is installed.

Position the panel so that it overhangs the eave strut by the thickness of the wall covering plus 3 ½". The upper end of the panel must be 7" beyond the web of the purlin.

PREPUNCHED PANEL HOLES AT THE EAVE ARE INTENDED TO BE PART OF THE GUTTER OVERHANG AND WILL BE HIDDEN BY THE GUTTER. FOR A BUILDING WITH SCULPTURED EAVE TRIM, THE PREPUNCHED HOLES WILL BE USED TO ATTACH THE EAVE TRIM TO THE PANEL.

Lay the female lip of the panel over the rake support. To prevent wind damage, secure the female lip to the rake support with “C” clamps or temporary fasteners. Fasteners must go through rake support. The panel will not be fastened permanently to the rake support until the rake trim is installed.

STEP 4 CONT.

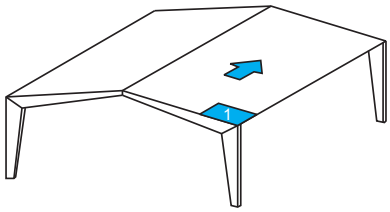

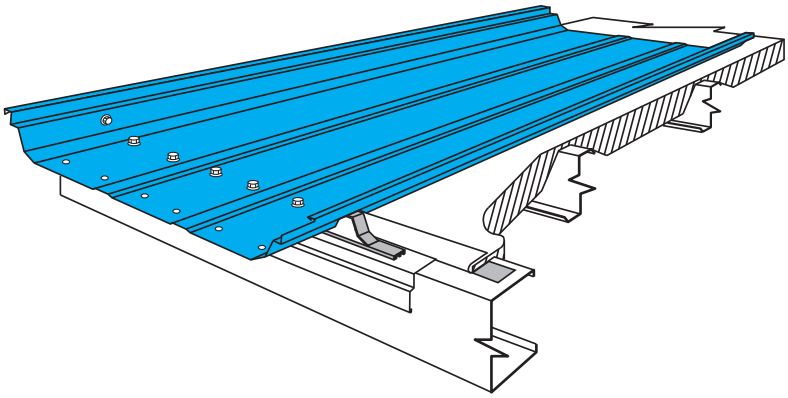

FIRST PANEL

Attach the panel to the eave strut and metal inside closures with Fastener #1E. Eight fasteners are required at this location.

NOTE: IT IS ESSENTIAL THAT THE ERECTOR MAINTAIN A 24" MODULE AT THE EAVE, WITH THE PROPER INSTALLATION OF THE INSIDE CLOSURES AND BY INSTALLING FASTENERS IN THE PROPER SEQUENCE.

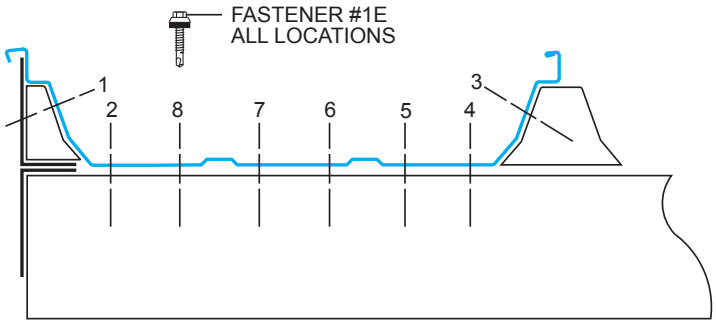

CAUTION

Do not, under any circumstance, step on the panel at the seam or at the panel ends until the adjacent side, end panels or eave fasteners are fully attached. The roof panel may not support the weight of a man at these locations and could affect panel module.

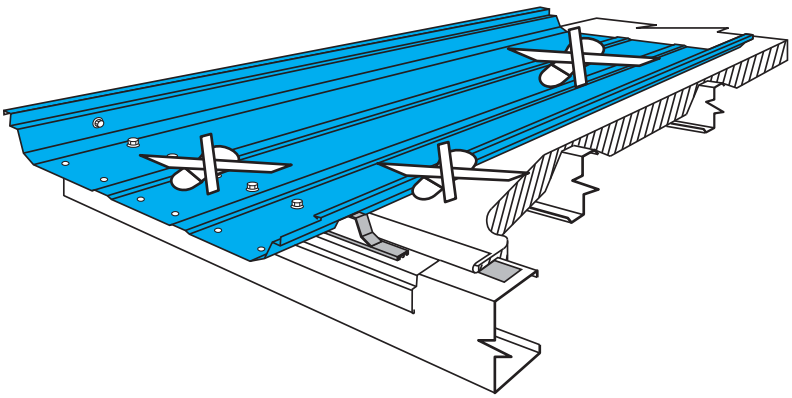

CAUTION

The roof should be swept clean of any drill shavings at the end of each day to prevent rust.

ERECTION SEQUENCE

double-lok®

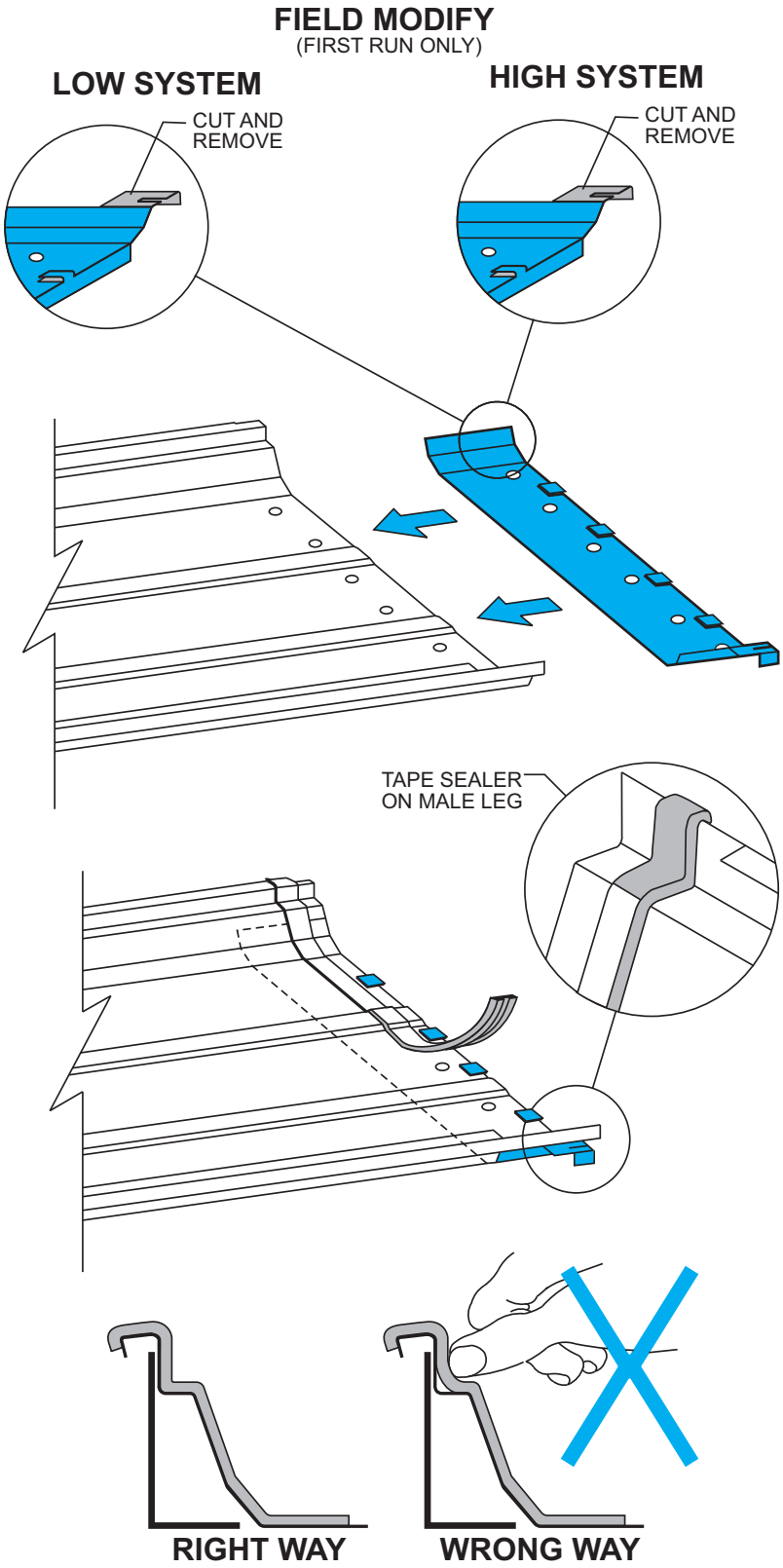

STEP 5

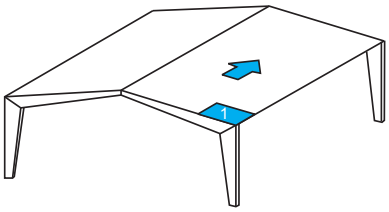

BACK-UP PANEL

NOTE

All back-up plates on first panel run will require field modification to avoid fouling rake support.

Slide a back-up plate onto end of panel; make sure the teeth on top of the back-up plate are on top of the panel. Visually check to see that the holes in the panel align with the holes in the back-up plate.

Place Tri-Bead tape sealer over the entire width of the panel. It must be centered directly over the pre-punched holes, following the panel configuration.

CAUTION

Forcing the tape sealer back into the corners will lessen the thickness of the tape sealer where it is needed most.

STEP 6

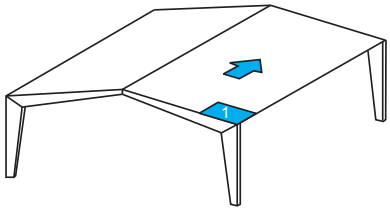

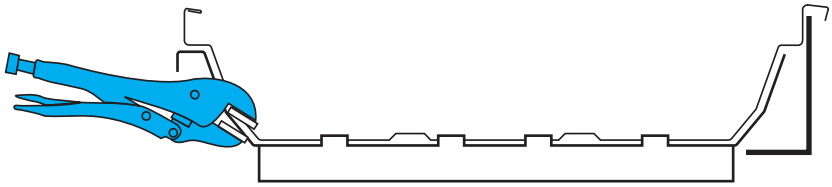

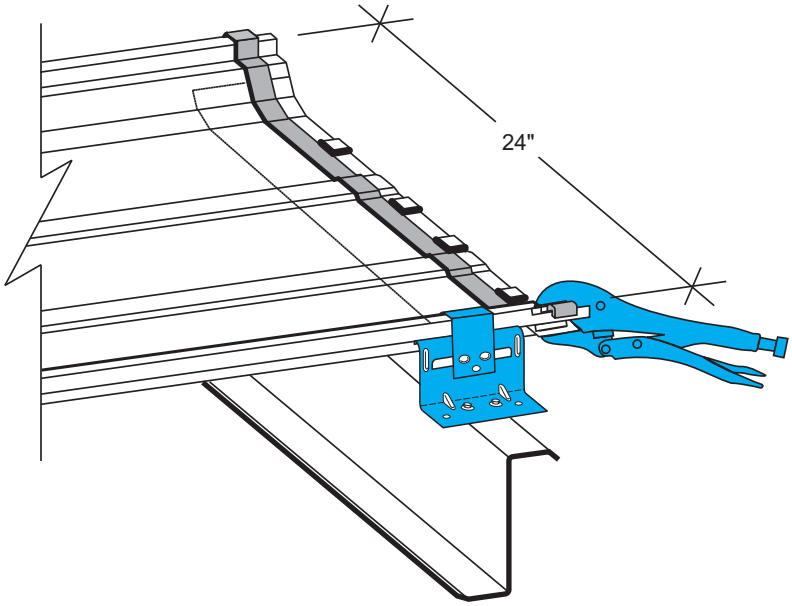

CLIP INSTALLATION

Before installing the first clip, clamp the male side of the panel to the side of the back-up plate with a pair of Vise-Grip® locking pliers. This will help maintain panel module at the endlaps.

Install a clip on the male leg of the panel at the endlap. **This should be the first clip installed as it controls the 24" module for the remainder of the panel.** Remove Vise-Grip® locking pliers and install clips on all remaining purlins.

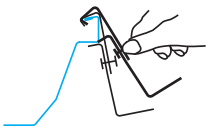

• Position the clip over the male leg of the panel as shown, and rotate clip downward.

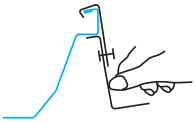

• With the uppper clip firmly seated, position the base firmly against the purlin flange.

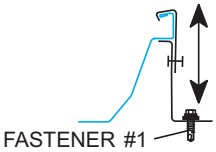

• When properly positioned, the vertical legs of the upper and lower sections of the clip will be pointed upward, as shown.

FASTENER REQUIREMENTS

Purlins- Fastener #1 or #1F
Joists- Fastener #6
(Two fasteners per clip)

CAUTION

For UL 90 Roofs, see Page DL-4.

CAUTION

The panel clip has factory applied mastic in the upper lip. This mastic is compressed when the clip is rotated in place. If, for some reason, a clip must be removed, a new clip must be used.

IMPORTANT

As each clip is installed, maintain a 24" panel module.

ERECTION SEQUENCE double-lok®

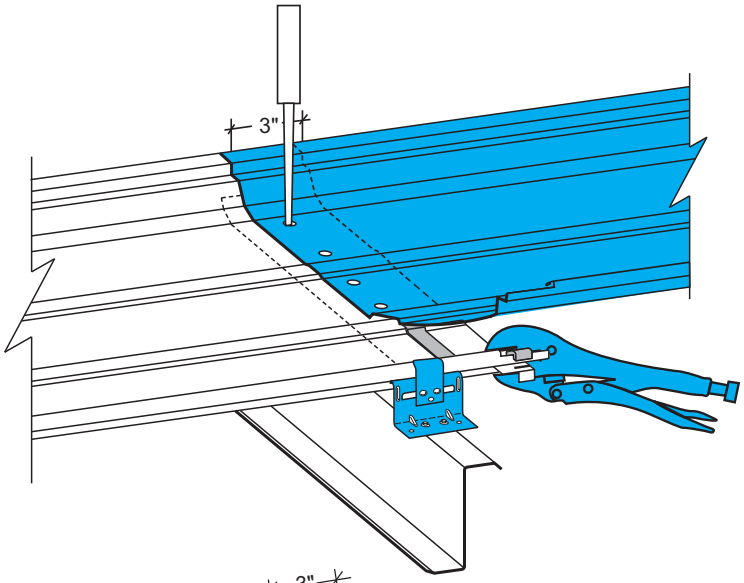

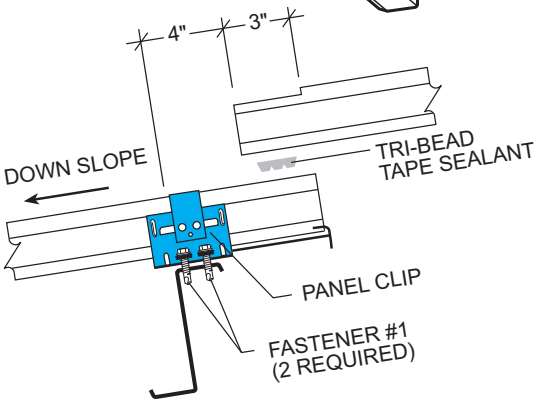

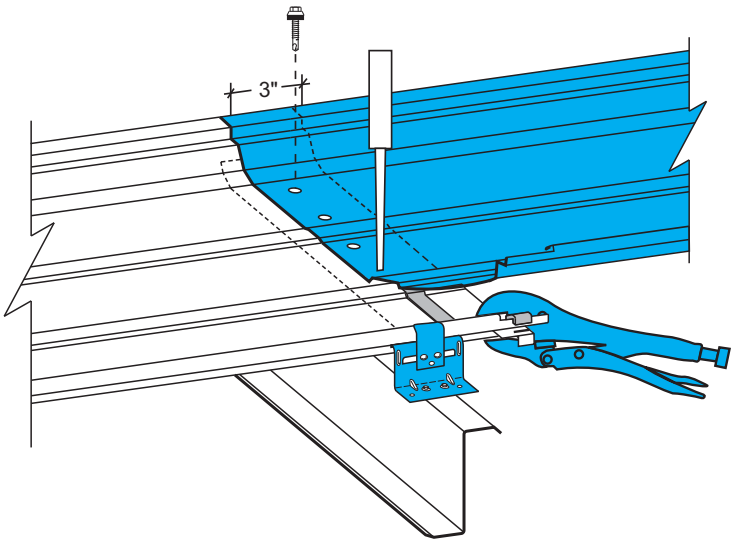

STEP 7

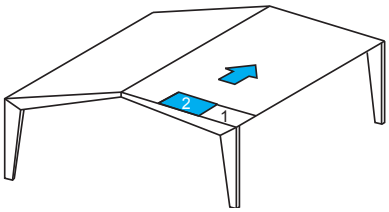

ENDLAP

NOTE

Step 7 applies only where more than one panel is used in a single slope.

Position female lip of upper panel over rake support, while holding male side of panel up away from the tape sealer. Using an awl, align the hole nearest the female side of the top panel with the corresponding hole in the lower panel and the back-up plate.

Once this is accomplished, rotate the male side of the upper panel down to rest on the Vise-Grip® locking pliers.

Make sure the panel notches are aligned.

Remove awl and insert in the middle hole nearest the male leg. Install Fastener #1E in the hole by the female leg.

CAUTION

The roof should be swept clean of any drill shavings at the end of each day to prevent rust.

STEP 8

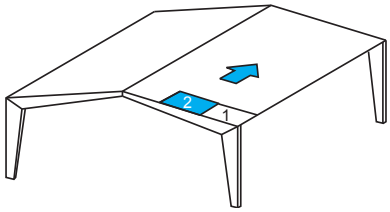

ENDLAP

NOTE

Step 8 applies only where more than one panel is used in a single slope.

All holes in the upper and lower panels and the back-up plate should now be aligned with each other.

Install Fastener #1E in sequence 2, 3 and the hole left by the awl after it is removed (4). Next, remove the Vise-Grip® locking pliers and install Fastener #1E in positions 5,6,7 and 8.

To ensure that the male legs do not separate at the panel endlap, clamp the horizontal ledge with a “C” clamp until the endlap is fastened together. **Apply Tri-Bead tape sealer over the notched portion of these male legs.**

Repeat the endlap procedures as required for each panel untill the ridge or high eave is reached.

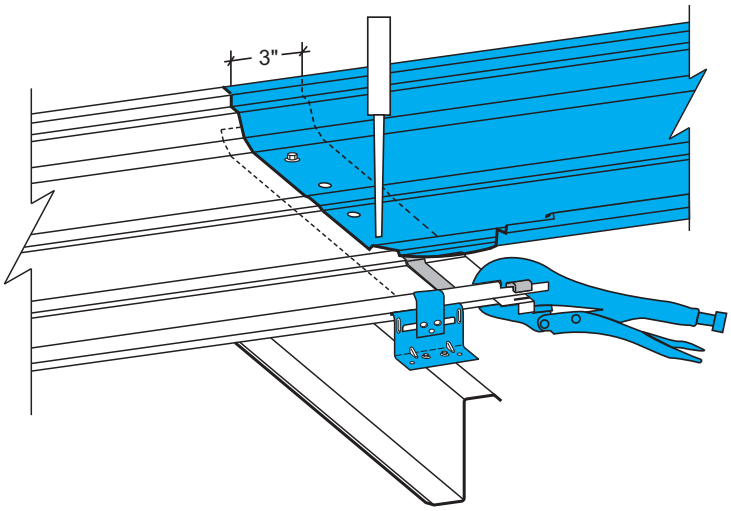

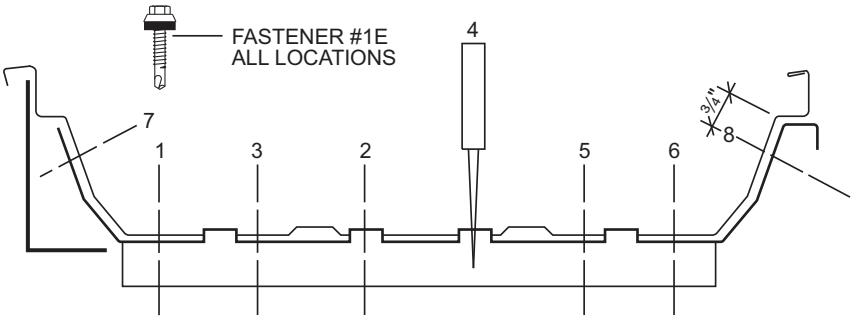

FASTENER SEQUENCE
FIRST RUN - ENDLAP

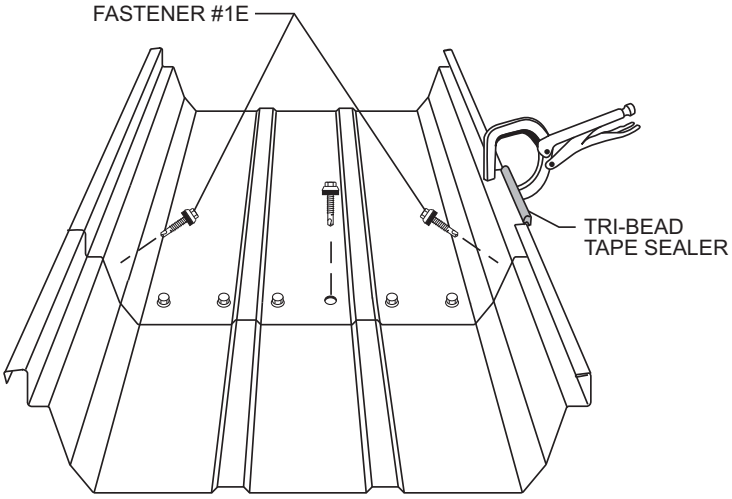

ERECTION SEQUENCE

double-lok®

STEP 9

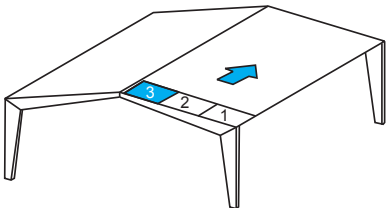

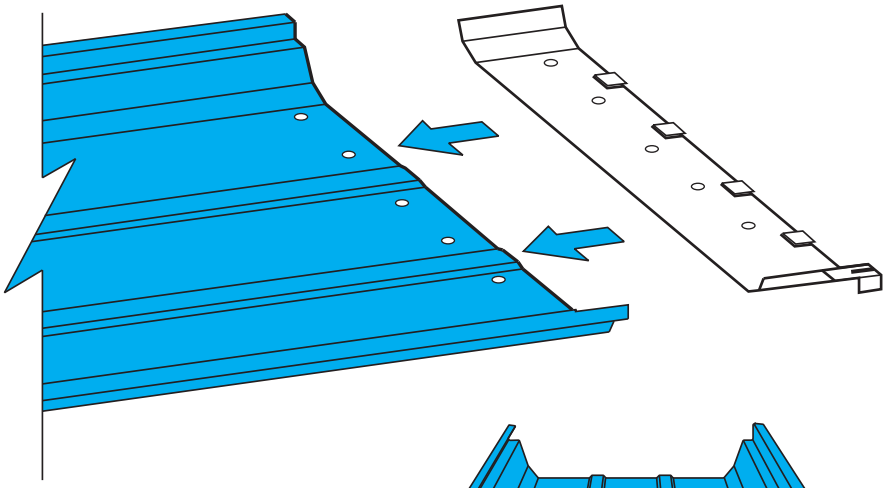

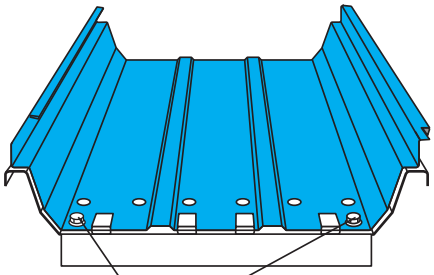

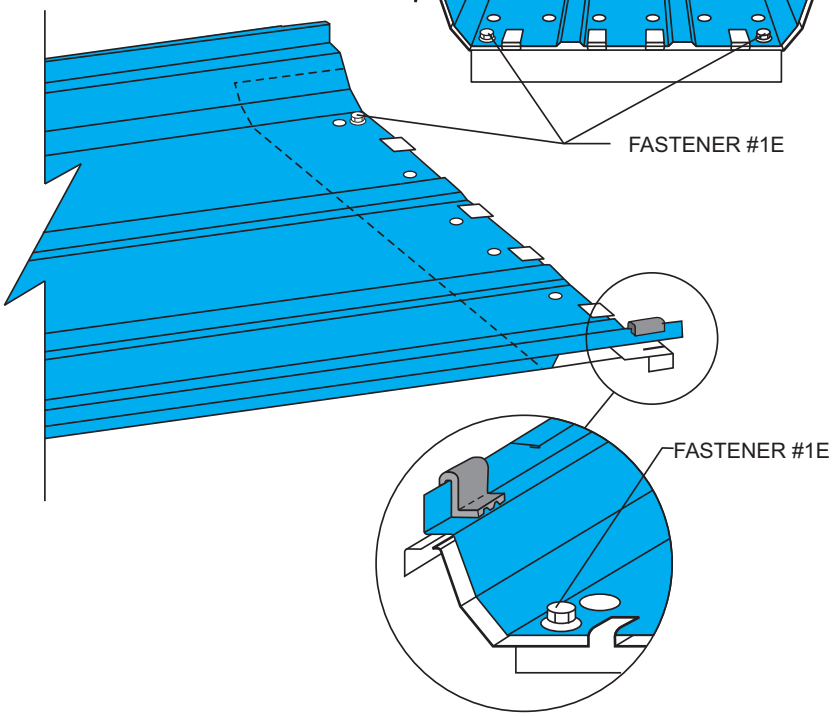

RIDGE PANEL

NOTE

All back-up plates on first panel run will require field modification to avoid fouling rake support.

At the ridge, install a back-up plate as in Step 5. The back-up plate is necessary to maintain panel module.

Install Fastener #1E upslope from the holes at each side of the panel. Fasteners should be at the edge of the panel. This will help maintain panel modularity at the ridge.

Install Tri-Bead tape sealer across the profile of the male leg at the ridge. This tape sealer will be centered 1 1/2" from the end of the panel, which is also in alignment with the prepunched holes. **DO NOT INSTALL TAPE SEALER ACROSS PANEL AT RIDGE AT THIS TIME**.

Install clips on ridge panel as in Step 6.

CAUTION

Installing the tape sealer to the male leg at the ridge is important . Without it, water could be driven behind the outside closure by a strong wind.

STEP 10

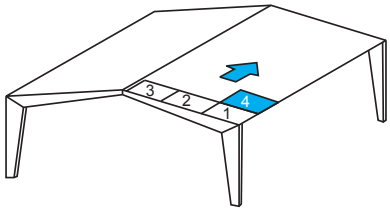

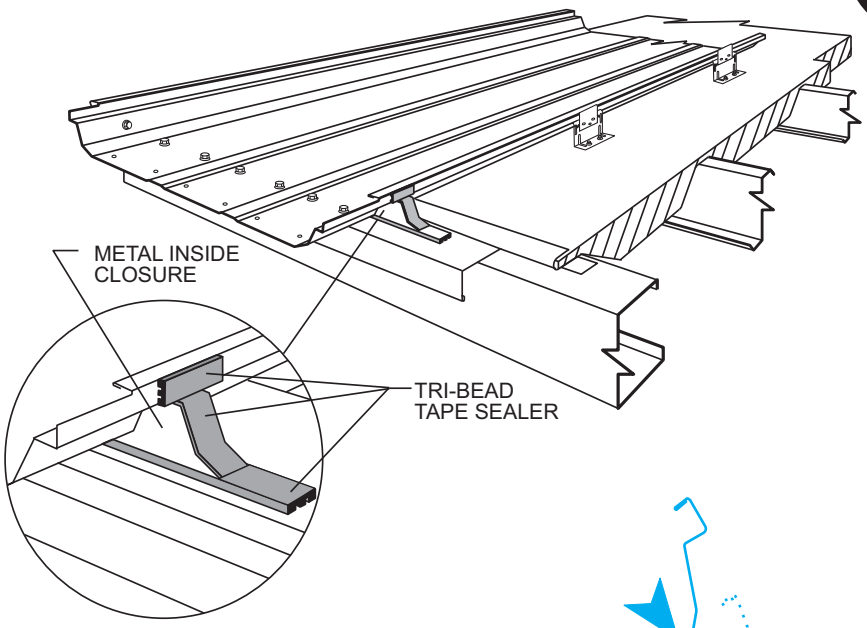

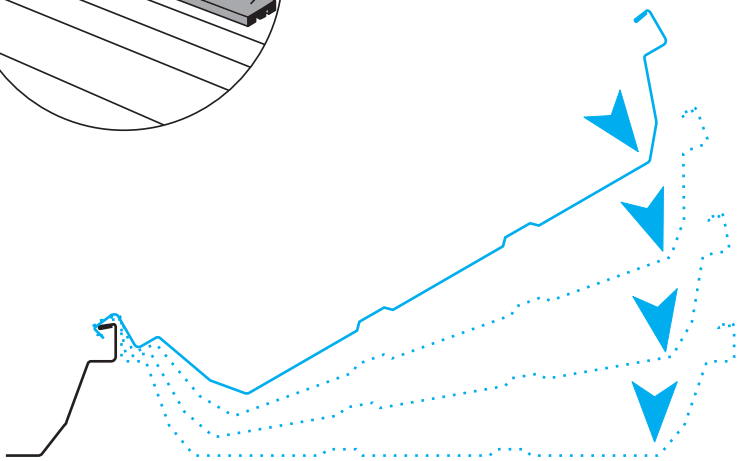

SUBSEQUENT RUNS EAVE

Apply tape sealer to the male leg of the first panel run directly over the inside closure. This will prevent water infiltration through the end of the seam. Install the next run of insulation and another inside closure using Fastener #1. The second run of roof is now ready to install.

Holding the male side of the next panel up, lay the female lip on top of the male leg of the adjacent panel and align it flush at the eave. Rotate the panel down, visually checking that the female lip is engaged onto the male leg of the adjacent panel along its entire length. **IF THE PANEL MUST BE RAISED FOR FURTHER ALIGNMENT, CARE SHOULD BE TAKEN TO AVOID PULLING THE FACTORY APPLIED MASTIC FROM THE FEMALE LIP**.

Install Fastener #1E at eave in the recommended sequence. Eight fasteners are required at this location.

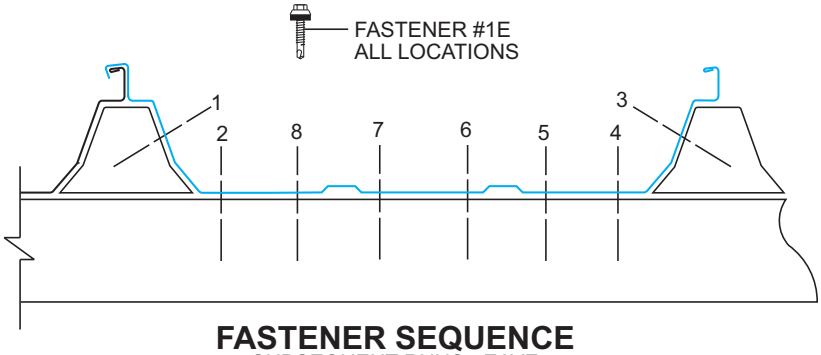

FASTENER SEQUENCE
SUBSEQUENT RUNS - EAVE

CAUTION

The roof should be swept clean of any drill shavings at the end of each day to prevent rust.

ERECTION SEQUENCE double-lok®

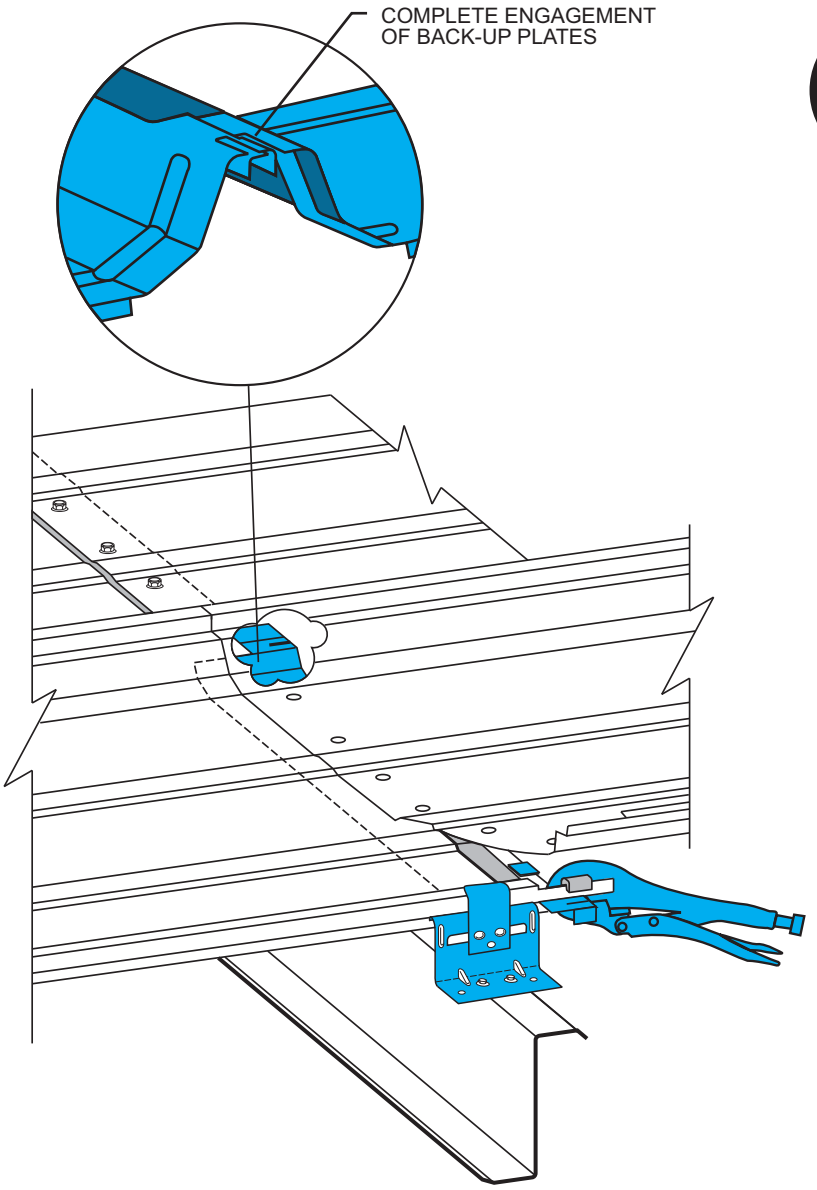

STEP 11

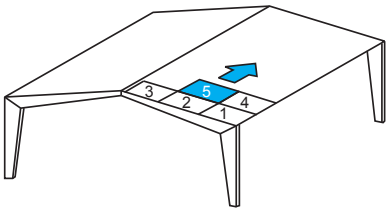

SUBSEQUENT RUNS ENDLAP

Install back-up plate and tape sealer as in Step 5. However, on this and all subsequent runs, care must be taken to engage the tab on the side into the slot of the adjacent back-up plate. This procedure will assist in maintaining a 24" panel module.

Install clips as described in Step 6.

Install upper panel as described in Step 7 & 8.

Repeat the endlap procedures as required for each panel until the ridge is reached.

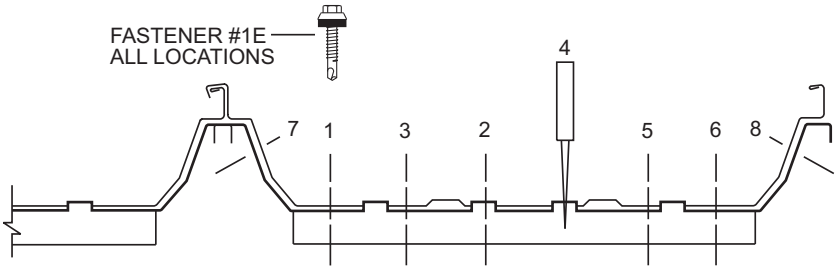

FASTENER SEQUENCE
SUBSEQUENT RUNS - ENDLAP

STEP 12

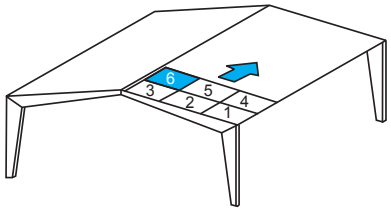

SUBSEQUENT RUNS RIDGE/OUTSIDE CLOSURE

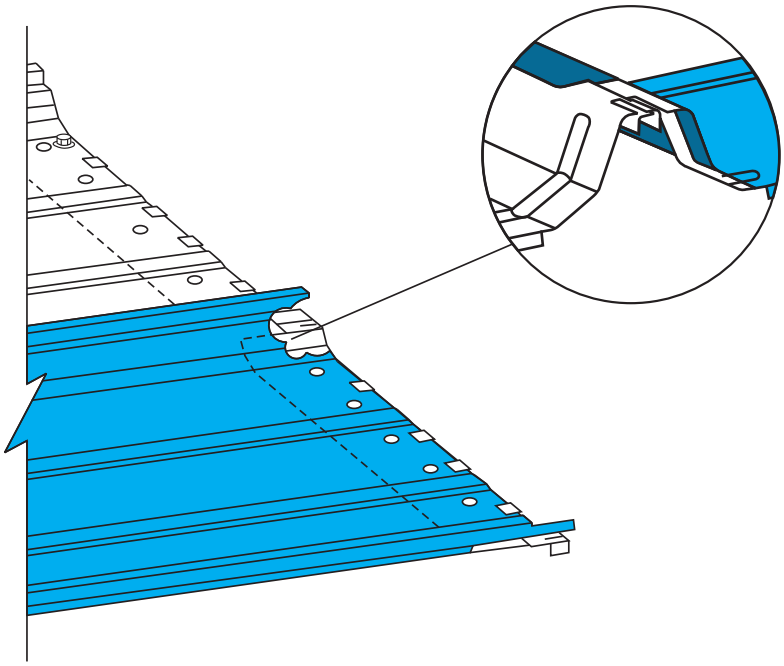

Install back-up plate, taking care to engage the tab on the side with the slot on the adjacent back-up plate.

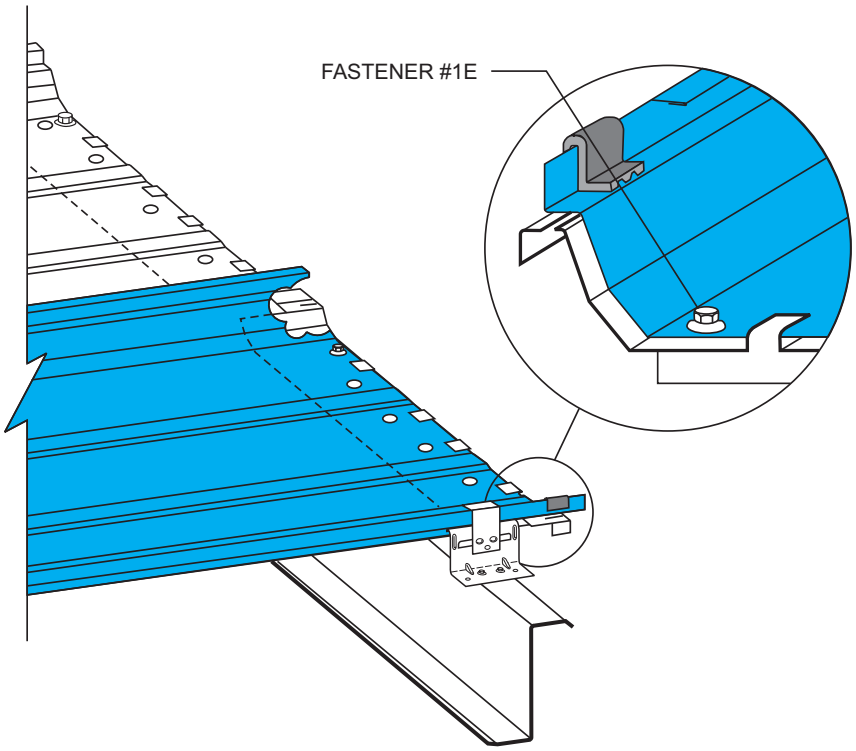

Install Fastener #1E and Tri-Bead tape sealer as described in Step 9.

Install clips as described in Step 6.

CAUTION

Installing tape sealer to the male leg is important. without it, water could be driven beind the outside closure by a strong wind

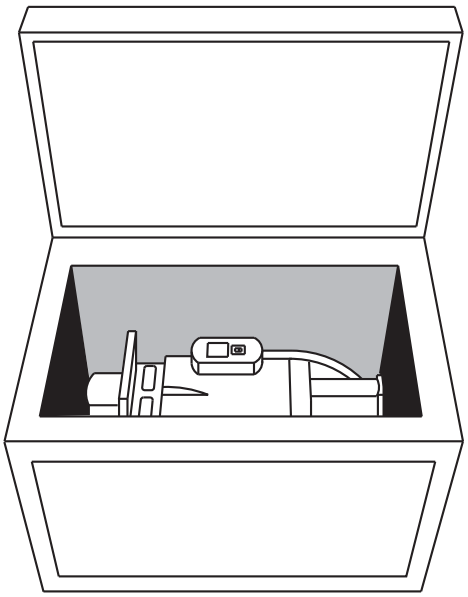

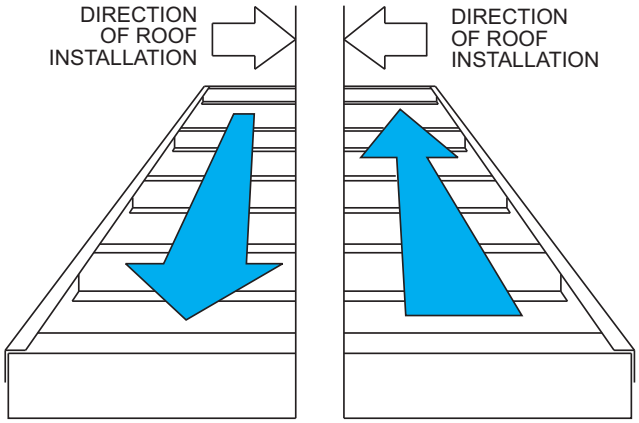

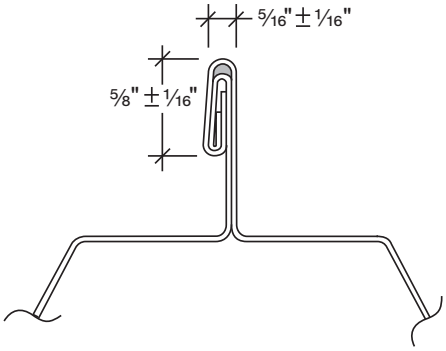

Cross Section of Finished Seam (Actual Size)

STEP 13 SEAMING PANEL SIDELAPS

The seamer comes in a specially designed box accompanied by a field manual and a hand seaming tool. **READ THE SEAMER MANUAL THOROUGHLY BEFORE STARTING THE SEAMING OPERATION. FAILURE TO ADHERE TO THESE INSTRUCTIONS MAY RESULT IN PERSONAL INJURY AND DAMAGE TO THE SEAMER AND/OR PANELS. THE ERECTOR WILL BE HELD LIABLE FOR ANY COSTS INCURRED FOR REPLACEMENT OR REPAIR.**

PRE-SEAMING INFORMATION

1. Locate seamer box. Assemble hand seaming tool.
2. Locate power source and check against power requirements in field manual.
3. Check seams for proper engagement.
4. Clean dirt, debris and excess sealant from seams and panel surfaces to avoid interfering with the seaming operation.
5. Panels do not have to be seamed as they are installed. However, to prevent panel separation by a strong wind, panels should be seamed as soon as possible. **ALL PANELS SHOULD BE SEAMED AT THE END OF EACH DAY.**

SEAMING OPERATION

To determine the direction of the seaming process, stand at the eave and look upslope. If the roof is being installed from left to right, the seamer will run from ridge to eave. If the roof is being installed from right to left, the seamer will run from eave to ridge.

INSPECTION OF SEAM

A visual inspection of the seam should be made to determine if the seam is forming properly. Check seam against the cross section provided. **IF THE SEAMER IS NOT PRODUCING A FINISHED SEAM IDENTICAL TO THE CROSS SECTION PICTURED, STOP AT ONCE AND CALL Pinnacle AT 1-800-201-1534.**

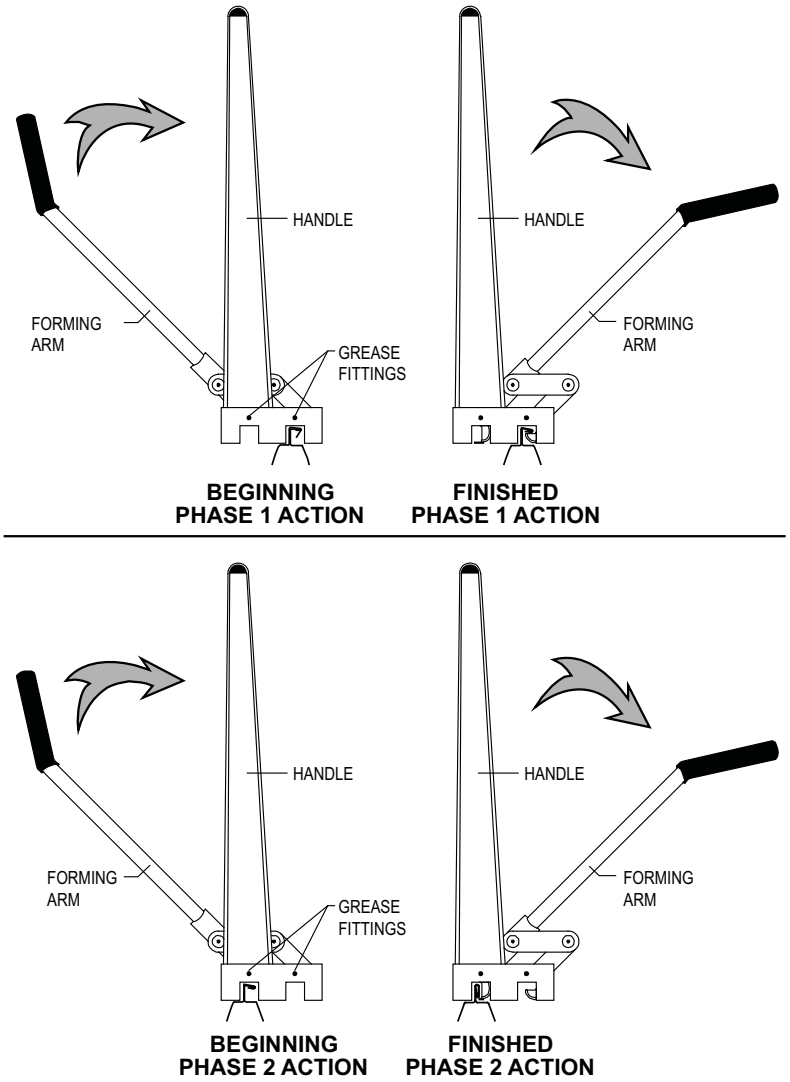

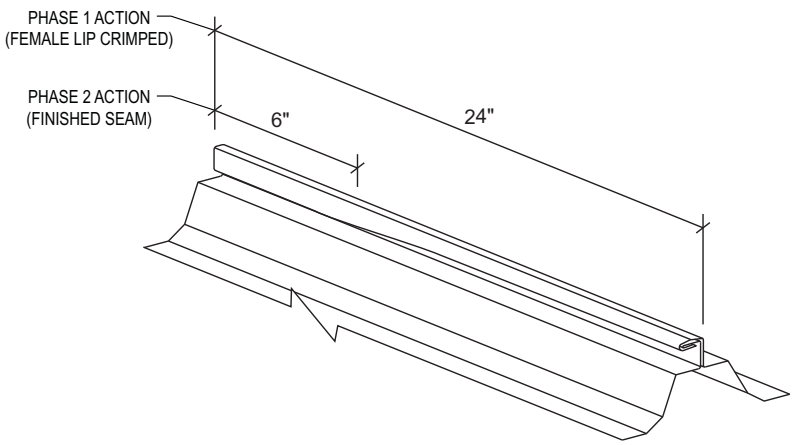

STEP 13 CONT.

SEAMING OPERATION

CAUTION

It is critical that the panel seams are crimped and folded as shown before using the electric seamer. Failure to follow these guidelines will result in damaged seams.

To begin seaming with hand tool, set the hand tool on the seam making sure seam is in the **PHASE 1 ACTION** slot. Align the edge of the hand tool with the end of the panel. Rotate the forming arm under the handle to produce 6" of **PHASE 1** seam. This should be done four times along the seam for a total of 24"

Return to the end of the panel to begin **PHASE 2 ACTION**. Set hand tool onto seam making sure seam is in the **PHASE 2 ACTION** slot. Align the edge of the hand tool with the end of the panel. Rotate the forming arm under the handle to produce 6" of finished **PHASE 2** seam. This should be done once per rib. **The relationship of this 6" of finished seam to the 24" of crimped seam is critical to the proper alignment of the rolls in the electric seamer.**

The seam is now ready to accept the electric seamer.

ERECTION SEQUENCE

double-lok®

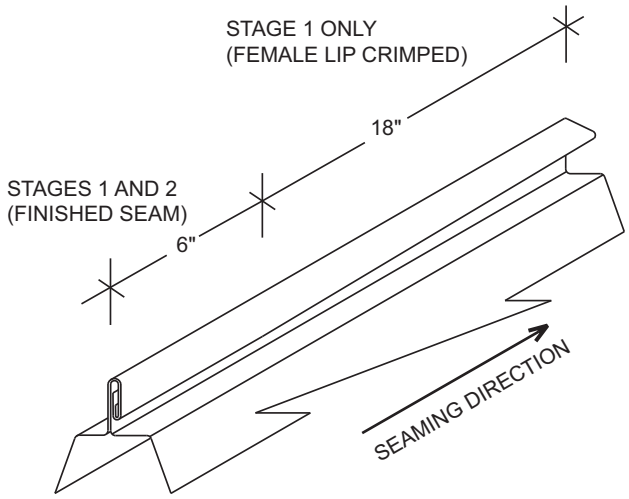

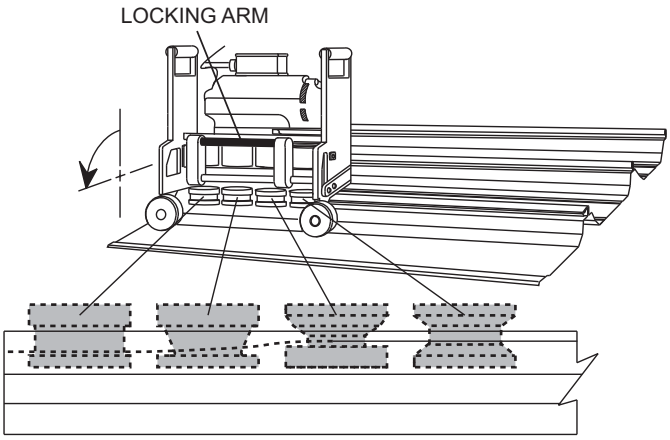

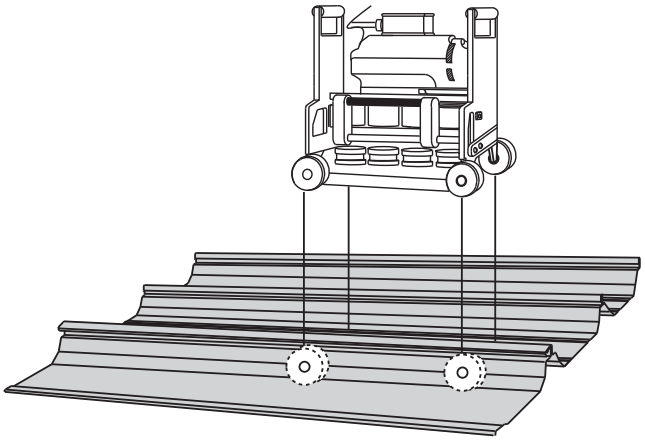

STEP 13 CONT.

SEAMING OPERATION

Set seamer on seam with the locking arm up and to open side of the seam. The rear wheels should be at the edge of the panel.

Check to see that the last roll of the seamer is on the finished portion of the seam and the other rolls are on the crimped portion of the seam. Push the locking arm down to engage the rolls and turn the seamer on.

Note: While seamer is running, walk in front of seamer applying foot pressure to top of panel seam while paying attention to end of panel run.

CAUTION

Seamer motor is equipped with 15 amp circuit breaker. Extension cord wire size must be 10 gauge and no longer than 200' from power source.

The manufacturer will not be responsible for motor damage if above instructions are not adhered to.

CAUTION

Seamer operation should be closely supervised at all times. A safety cable should be attached to the seamer.

Stop seamer about one foot from ridge. Disengage locking arm and remove the electric seamer.

Finish seam with hand tool by first crimping the remaining portion of female lip. Then, using the second stage of the hand tool, fold and finish the seam. Repeat this procedure for all panels.

IF DIFFICULTY ARISES USING THE SEAMING MACHINE, PLEASE CALL 501-941-3929.

STEP 14

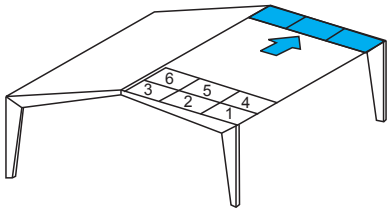

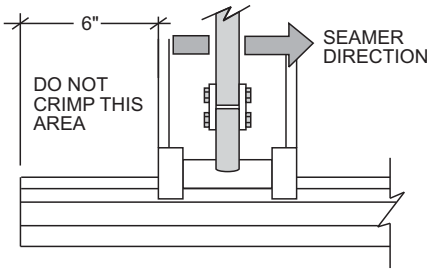

PREPARING PANEL FOR SEAMER WITH HAND TOOL

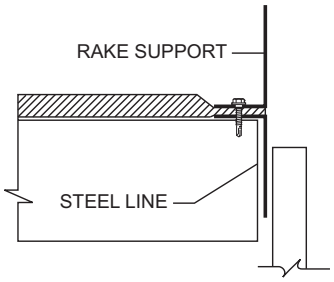

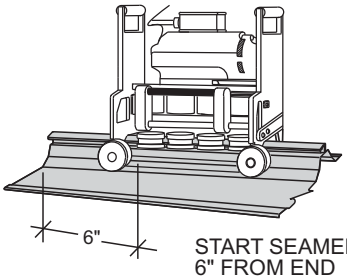

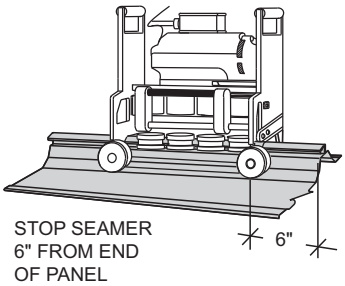

FLATTENING MALE LEG BEFORE PANEL INSTALLATION

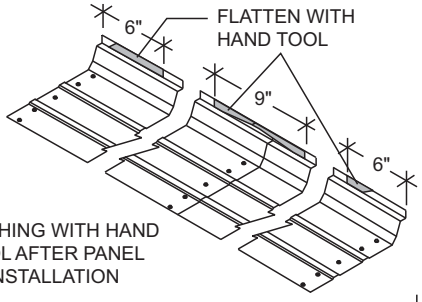

FINISHING WITH HAND TOOL AFTER PANEL INSTALLATION

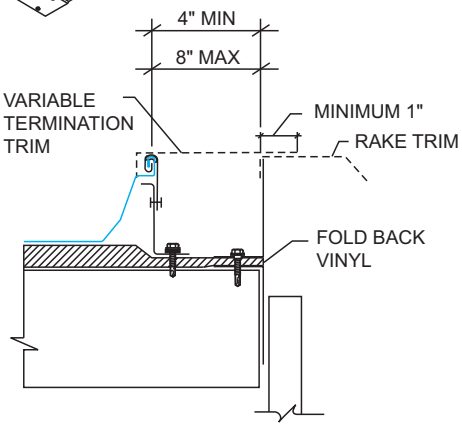

LAST PANEL RUN

This roof system is designed to finish in the high on even footage buildings by using 24", 18", or 12" panels on the last run.

With insulation in place, install rake support along steel line.

FINISHING ON MODULE

If your roof is finishing on module, the male leg of the last panel run will need to be flattened before installation, with the exception of the first and the last 6" of each panel. This will allow for proper panel engagement at endlaps once panels are installed. Use the hand tool to flatten the male leg 6" from the starting end. (Refer to legend plate on seamer to determine the end that the seamer will start from.) With locking bar up, place seamer on male leg so that the last two rolls of the seamer are on the flattened portion of the seam. The first two rolls will be under the unflattened portion of the seam. Lower locking bar and run seamer to within 6" of the end of the panel. Raise locking bar and remove seamer. Repeat this procedure for all panels. Install panels as usual. Use hand tool to finish the unflattened portion of the male leg at the eave, ridge and endlaps.

FINISHING OFF MODULE

If the panel ends 4" - 8" away from the rake support due to an out-of-square condition or other factors, simply install the panel clips and run seamer over male leg. This will lock the clips in place and flatten the male leg. This system allows for the roof to be trimmed in the high.

CAUTION

The seamer will not support itself while flattening the male leg on the last run. It must be supported during this operation.

ERECTION SEQUENCE

double-lok®

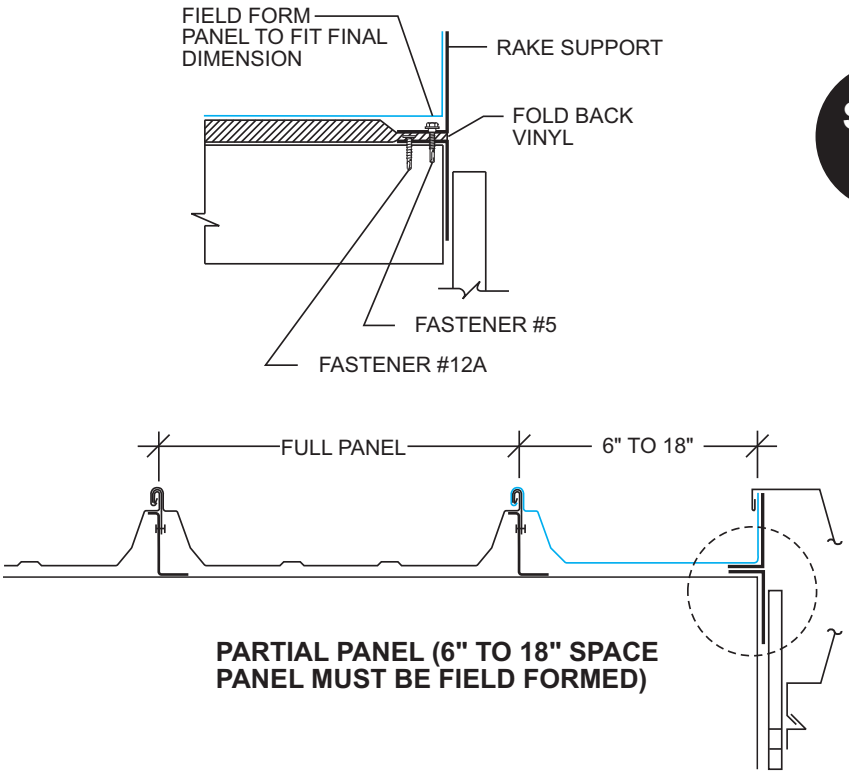

PARTIAL PANEL (6" TO 18" SPACE PANEL MUST BE FIELD FORMED)

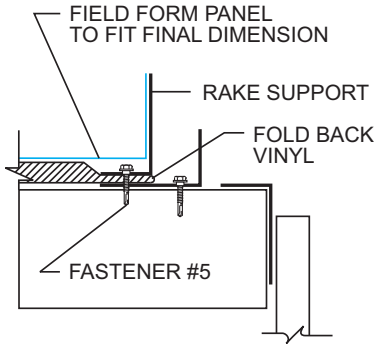

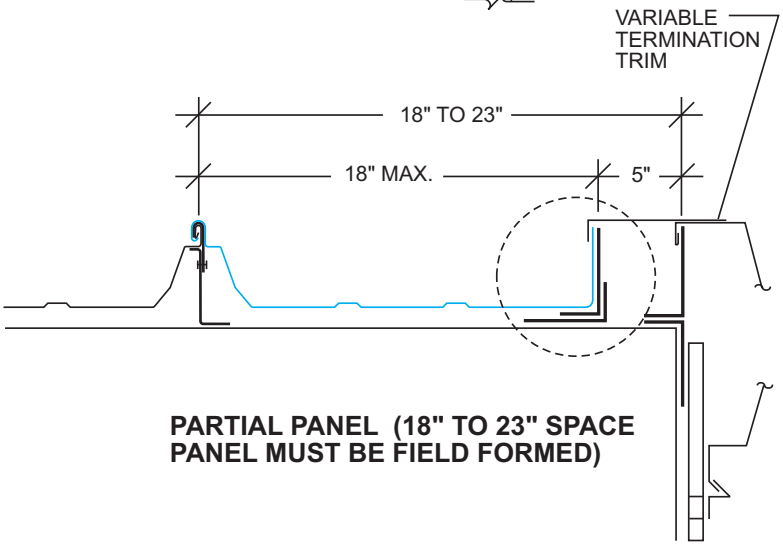

PARTIAL PANEL (18" TO 23" SPACE PANEL MUST BE FIELD FORMED)

STEP 14A

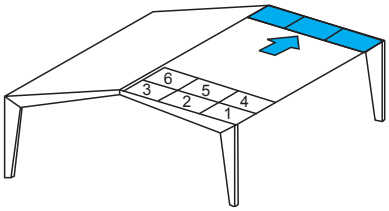

LAST PANEL RUN

OPTIONAL

The roof is designed to finish in the high on even footage buildings. Odd length buildings and variations in erection practices may dictate that an alternate detail be used.

When terminating in an odd dimension, field cut and bend a 3" vertical leg on the panel.

After laying the last insulation run, install the field formed panel. Temporarily fasten the formed leg of the panel to the rake support with vice grips.

The combination of field formed panel and Variable Termination Trim may be used to accommodate large dimensions as shown. Refer to page DL-81 for alterate termination details.

CAUTION

The roof should be swept clean of any drill shavings at the end of each day to prevent rust.

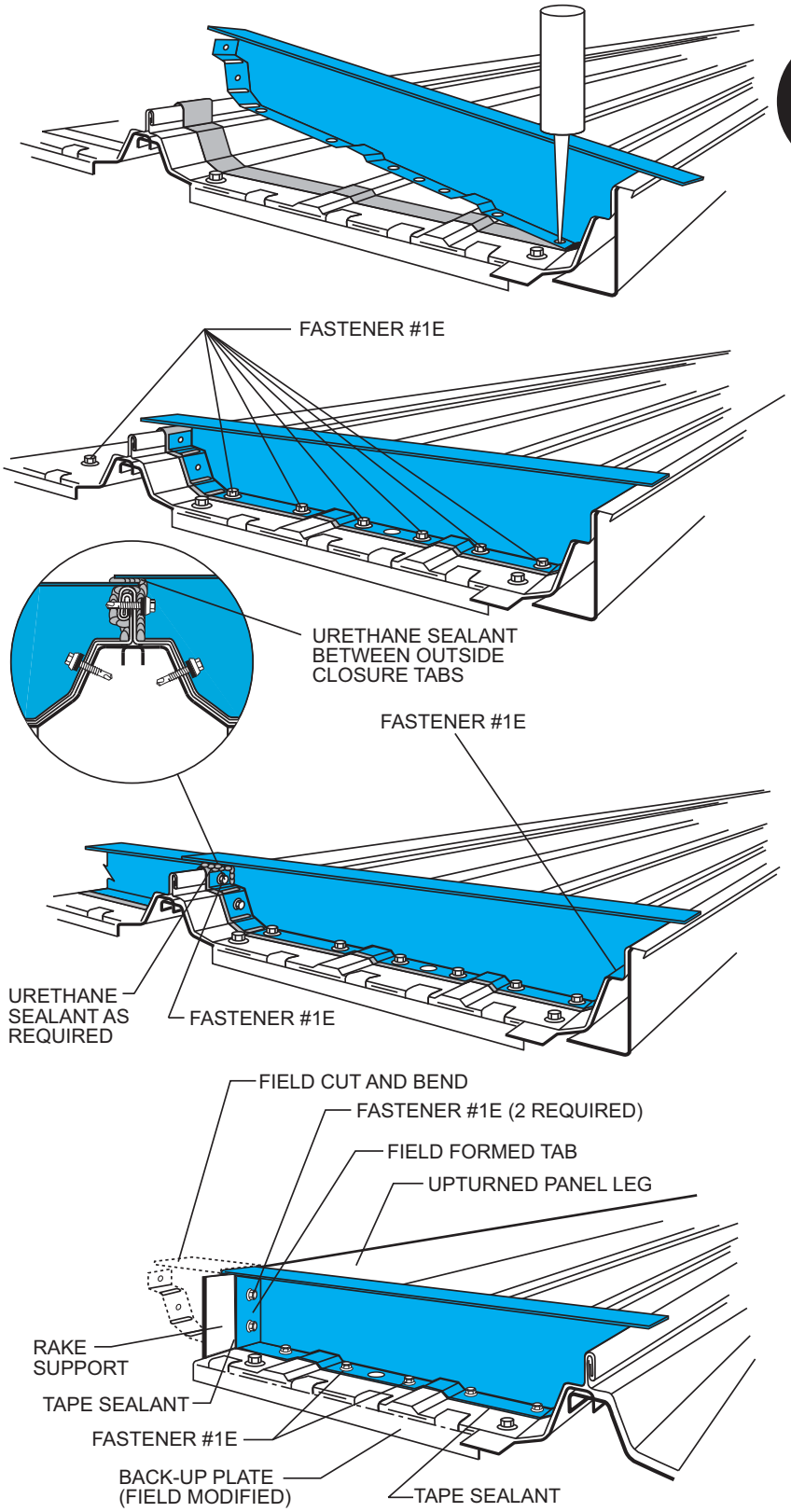

STEP 15

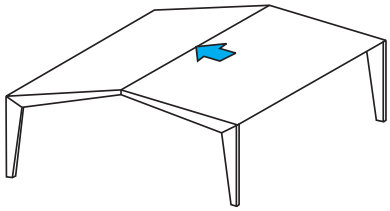

OUTSIDE CLOSURE

After all panel runs are installed and seamed, return to first panel run at the ridge. Install Tri-Bead tape sealer across full width of each panel, covering the prepunched holes.

Rotate outside closure into position contacting the female side of the panel first. Using an awl, align the first hole on the female side of the outside closure with the corresponding hole in the panel and back-up plate. Remove the awl and install Fastener #1E in this hole.

Push the other end of the outside closure into position and align the holes with the awl. Remove the awl and install Fastener #1E in all remaining holes except for the hole at the panel seam. **Do not install the panel seam fastener at this time.**

Install all outside closures on both sides of the ridge.

If the last panel run was field modified, the final outside closure on the last panel will require field modification as well. A tab should be formed on the end of the outside closure for attachment to the upturned leg of the roof panel (field formed). This tab should be attached to the panel with Fastener #1E, two required.

Install Fastener #1E in remaining hole at the panel seam of all outside closures. The fastener installed in the top hole must go through the panel seam and the corresponding hole of the adjacent outside closure.

Use urethane sealant to fill any voids around panel seam on upslope side of outside cosure.

ERECTION SEQUENCE

double-lok®

STEP 16

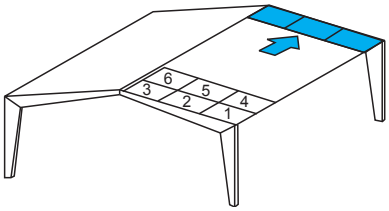

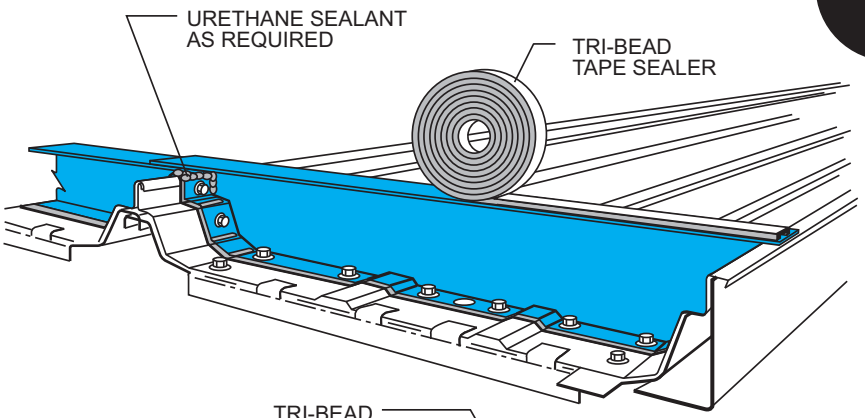

RIDGE-OUTSIDE CLOSURE/FLASHING

Apply Tri-Bead tape sealer to the top of the outside closure.

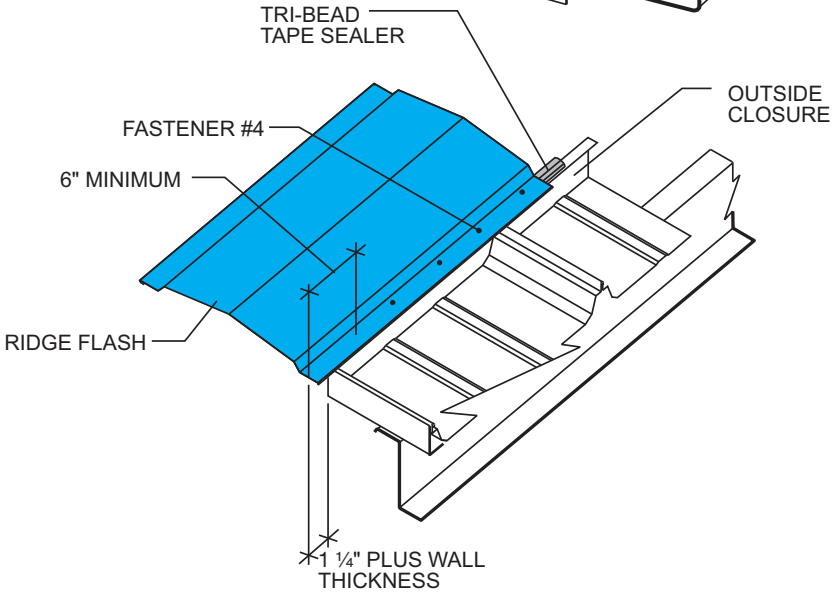

Install the ridge flashing starting and ending 1 ¼" plus wall thickness outside the steel line. Fasten the ridge flashing to the outside closures with Fastener #4. Install a fastener 1 ½" from panel seam on both sides of panel. Install additional fasteners directly above minor ribs of panel. Four fasteners are required at each panel. Leave 6" unfastened on each end to allow for the rake trim to be installed later. **DO NOT FASTEN THROUGH THE LOCK OF THE STANDING SEAM**.

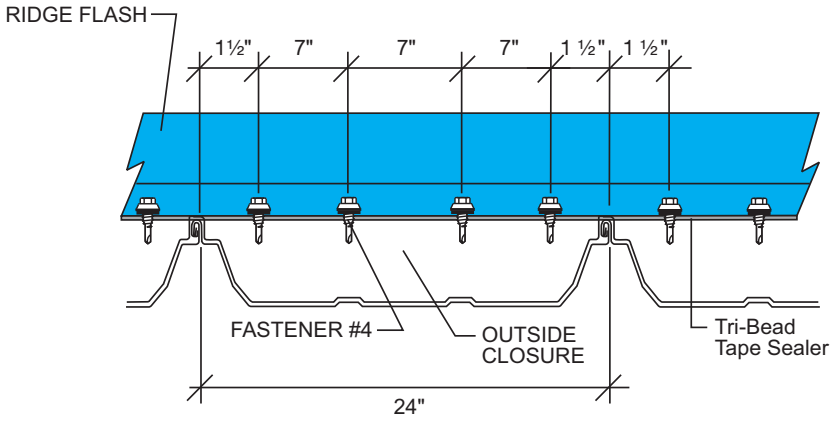

For floating peak box installation see page DL-80.

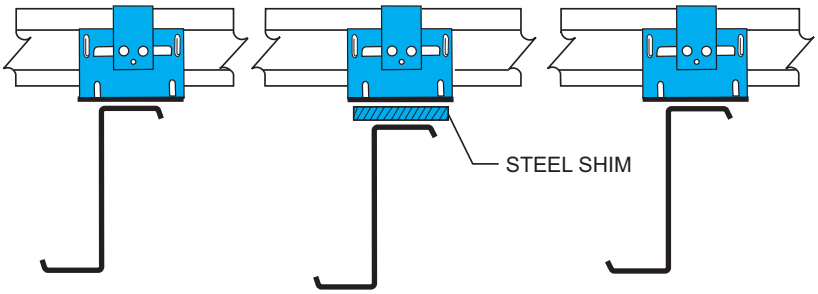

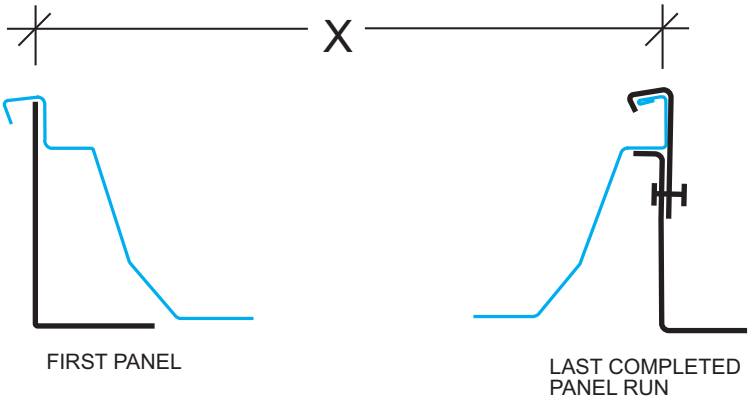

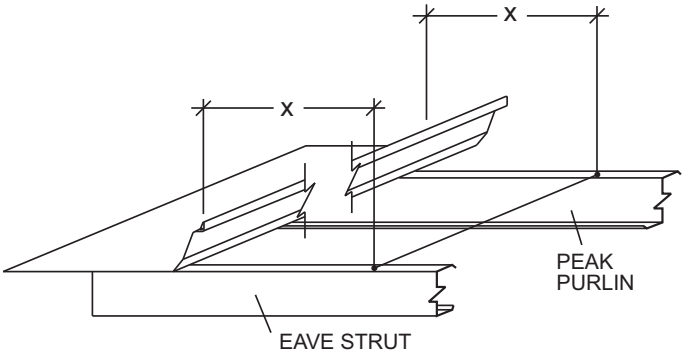

RECOMMENDED ERECTION PRACTICES

CORRECTING OUT-OF-PLANE SUBSTRUCTURE

Occasionally a purlin may be encountered that is lower (out-of-plane) than those adjacent to it. When a clip is attached to this purlin, it will go down further than those adjacent to it, distorting the seam. This can cause the next panel sidelap to be difficult to lap together in this area. To compensate for this lower purlin, a steel shim may be placed under the clip to bring it up to the proper height (in plane). This shim should be no thicker than 1/4". If 1/4" is not enough, then structural modification will be necessary.

Avoid "stair-stepping" of the panels at the eave. This will cause problems engaging back-up plates at the endlap and ridge. Any "stripped out" fasteners at the endlaps or outside closures should be immediately replaced with Fastener #2A. Place a 1" long piece of tri-bead tape sealer over the "stripped out" hole before installing Fastener #2A. This will allow the fastener threads to be coated with tape sealer and provide a good seal.

NEVER ALLOW PANELS TO COME INTO CONTACT WITH LEAD, COPPER, GRAPHITE, GASOLINE OR OTHER HARSH CHEMICALS AS THIS WILL VOID THE GALVALUME® WARRANTY.

CHECK ROOF FOR PANEL ALIGNMENT

Check the roof every three or four runs for panel alignment as it is being erected. This can be accomplished by two different means.

1. Measure from the rake support to the seam of the last completed panel run. Take measurements at the ridge, eave, and all endlaps.
2. Attach a stringline to the eave plate and ridge purlin, running parallel to the rake support. The stringline should stay ahead of the work and can be moved across the roof as construction progresses. Measure from the stringline back to the last completed panel run. Take measurements at the ridge, eave, and all endlaps.

SPECIAL ERECTION TECHNIQUES double-lok®

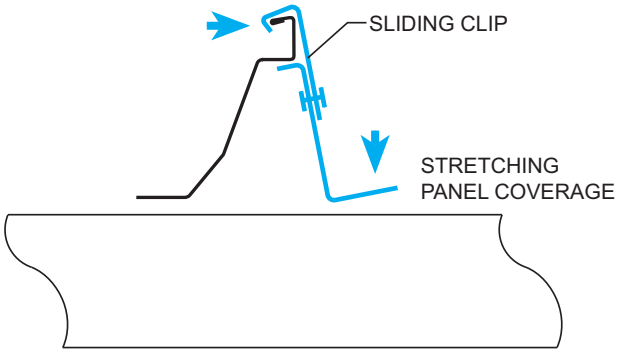

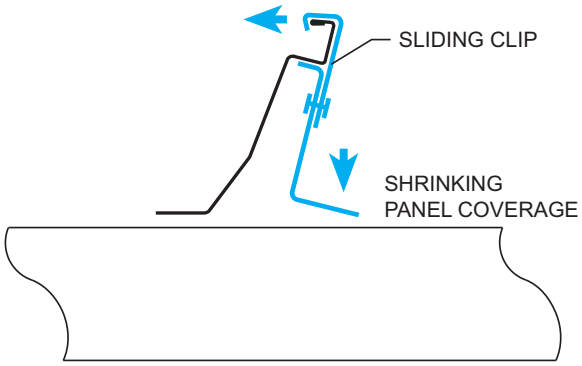

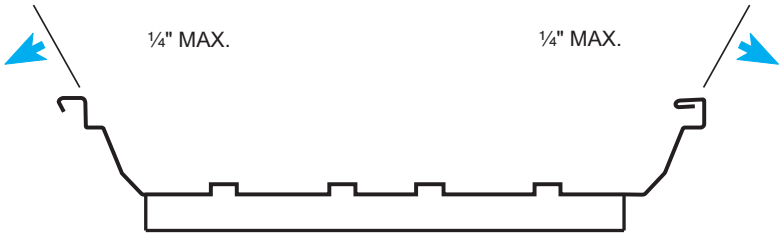

STRETCHING PANEL COVERAGE

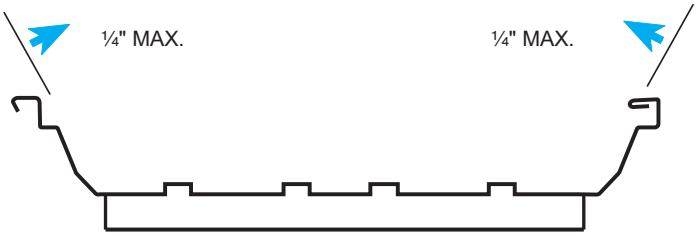

SHRINKING PANEL COVERAGE

RECOMMENDED ERECTION PRACTICES

(CONTINUED)

ADJUSTING PANEL WIDTH

NOTE

Do not adjust panel width more than ½" on any panel area.

SLIDING CLIP

To stretch panel coverage, install the clip at the panel endlap or ridge with the base angled away from the panel. As the fastener is installed through the base of the clip and into the purlin, the clip base will rotate down to the purlin causing the top of the clip to move outward, stretching the panel coverage. Install the remainder of the clips as usual.

To shrink panel coverage, install the clip at the panel endlap or ridge with the base angled toward the panel. As the fastener is installed through the base of the clip and into the purlin, the clip base will rotate down to the purlin causing the top of the clip to move inward, shrinking panel coverage. Install the remainder of the clips as usual.

BACK-UP PLATES

To stretch panel coverage, bend the sides of the back-up plate out and install at endlap or ridge. Do not bend either side more than ¼". Install clips as usual.

To shrink panel coverage, bend the sides of the back-up plate in and install at endlap or ridge. Do not bend either side more than ¼". Install clips as usual.

double-lok® SPECIAL ERECTION TECHNIQUES

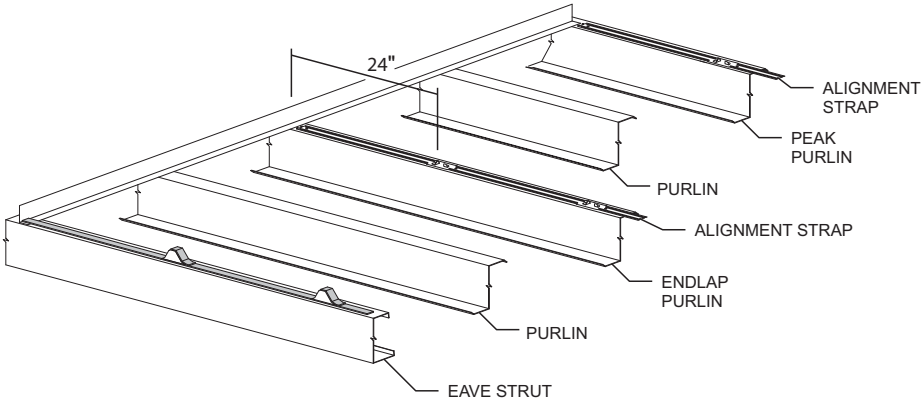

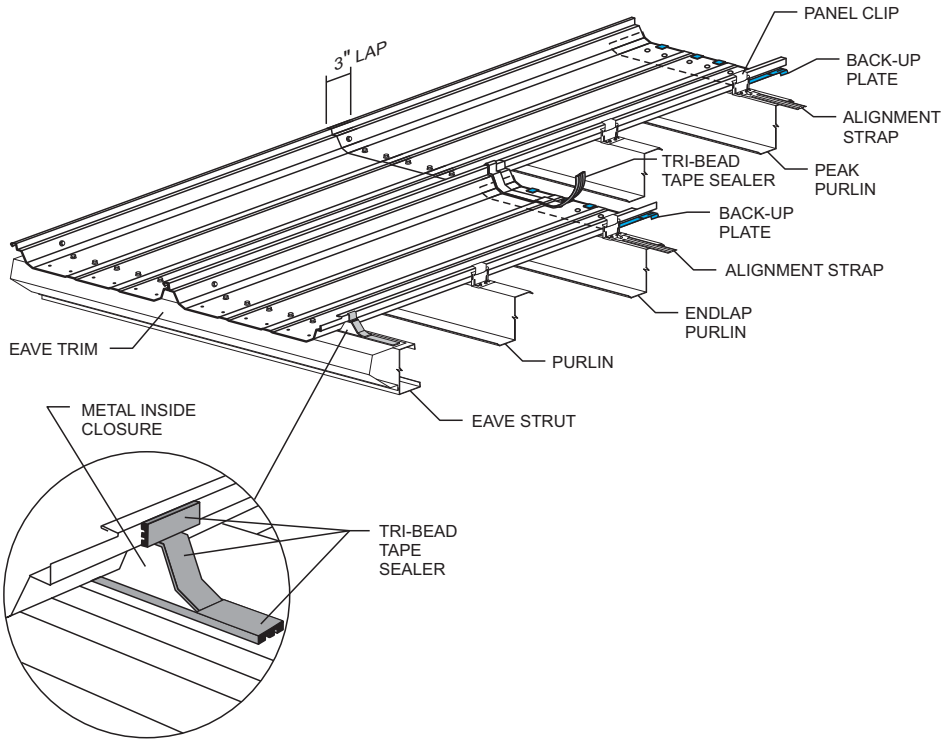

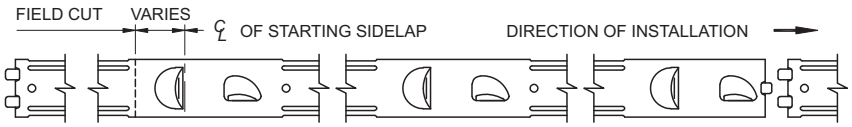

OPTIONAL PANEL CLIP ALIGNMENT STRAP
(6'-0" LONG)
LOCATED AT ENDLAP PURLIN AND THE PEAK PURLIN

RECOMMENDED ERECTION PRACTICES

(CONTINUED)

USING PANEL ALIGNMENT STRAP

Panel alignment straps can be used to hold panel module. Install alignment straps at each end lap purlin and the peak purlin for the full length of the building. The alignment straps have two lances at 24" on center that allow the base of the panel clip to nest in between them. The vertical leg of the panel clip should fit snugly against the flat side of the tall lance in the alignment strap.

Start the alignment strap at the rake support angle. The alignment strap has two tabs on one end and one tab on the other end. The end with two tabs should be oriented to leading end of the roof panel installation. The first alignment strap should be installed with the flat side of the tall lance exactly 24" from the vertical leg of the rake support angle. Fasten the alignment strap to the purlin with Fastener #1 at each prepunched hole location. Subsequent alignment straps will be engaged to the previous strap and fastened to the purlins as outlined above.

During panel installation, panel clips at the end lap and ridge purlins are to be installed first. When installing these clips, ensure the clip bases fit in between the void created by the two vertically formed lances in the alignment strap. This will hold the clips at these locations on 24" module. After these clips are installed, the remaining clips can be installed in any order convenient to the erector.

PINNACLE™ STRUCTURES. INC.

SPECIAL ERECTION TECHNIQUES double-lok®

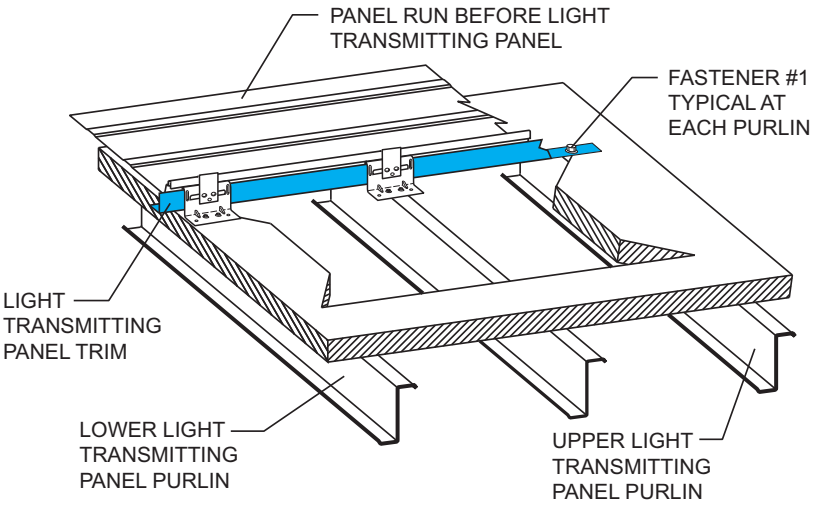

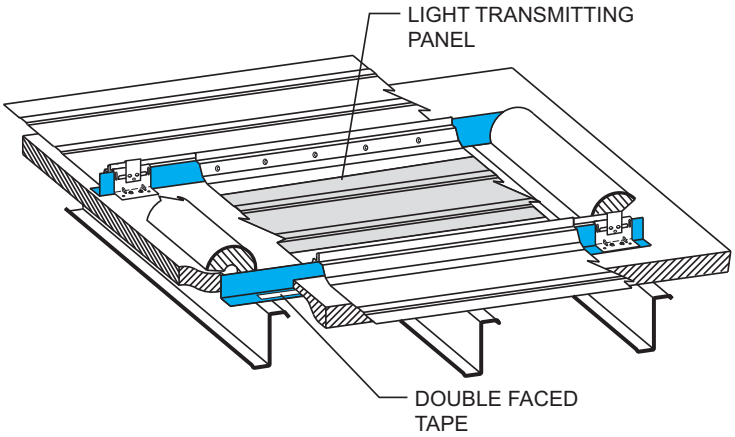

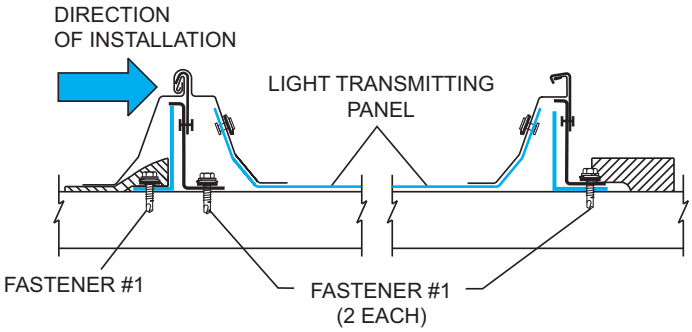

LIGHT TRANSMITTING PANEL TRIM INSTALLATION

(OPTIONAL)

Light transmitting panel trim is available to cover the exposed insulation at the sides of the light transmitting panel opening. Two pieces of 2 ¼" x 3 ¼" x 10'-3" angle are required per light transmitting panel. This angle is designed to work with either the low or the high system. **THE 2 ¼" LEG IS TURNED UP FOR THE LOW SYSTEM AND THE 3 ¼" LEG IS TURNED UP FOR THE HIGH SYSTEM**.

INSTALLATION PROCEDURE

Install panels up to light transmitting panel run. Do not install clips on this run until first light transmitting panel trim piece is installed. Cut and remove insulation where light transmitting panel is to be located. Leave enough insulation at the top and bottom of the opening to be rolled back, allowing only the backing to be exposed. Place double faced tape on top of the horizontal leg of the trim to hold the insulation. Notch trim for back-up plates and install directly under male leg of last panel installed, running from lower light transmitting panel purlin to upper light transmitting panel purlin. Attach to purlins with Fastener #1. Install clips. Install lower light transmitting panel run panel. Leave upper-most clip off until next trim piece is installed. Fold insulation end tab under lower panel and install light transmitting panel. Fold upper insulation end tab above light transmitting panel. Fold upper insulation end tab above light transmitting panel and install upper light transmitting panel. Place double faced tape on next trim piece and notch for back-up plates. Install directly under male leg of light transmitting panel and clip all panels down.

CAUTION

It is the user's responsibility to ensure that the installation and use of all light transmitting panels comply with State, Federal and OSHA regulations and laws, including, but not limited to, guarding all light transmitting panels with screens, fixed standard railings, or other acceptable safety controls that prevent fallthrough.

double-lok® SPECIAL ERECTION TECHNIQUES

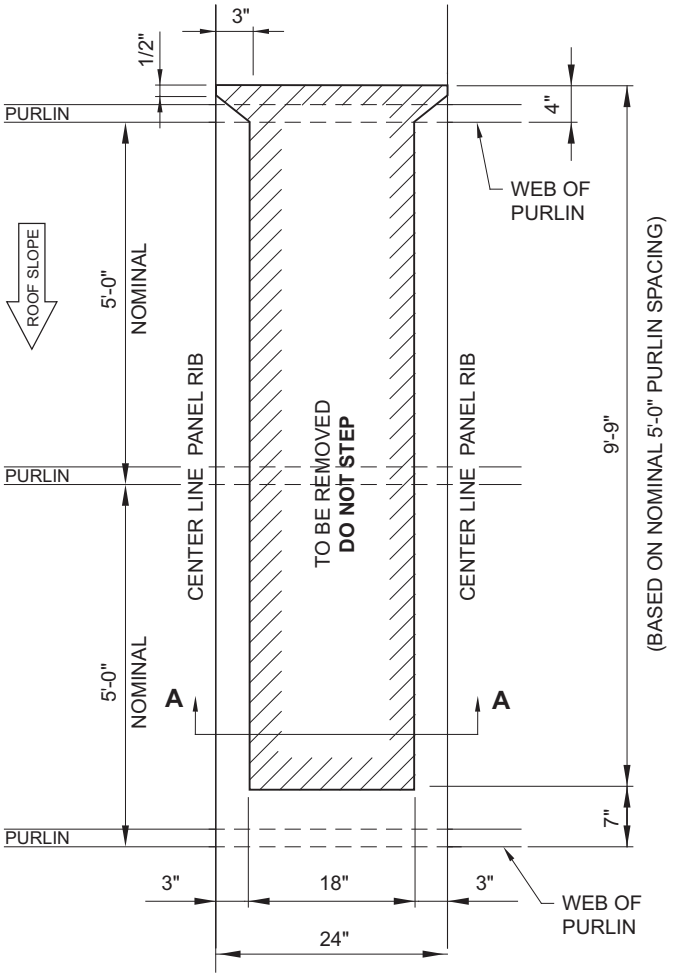

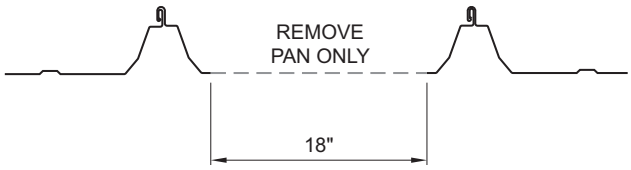

SECTION A-A

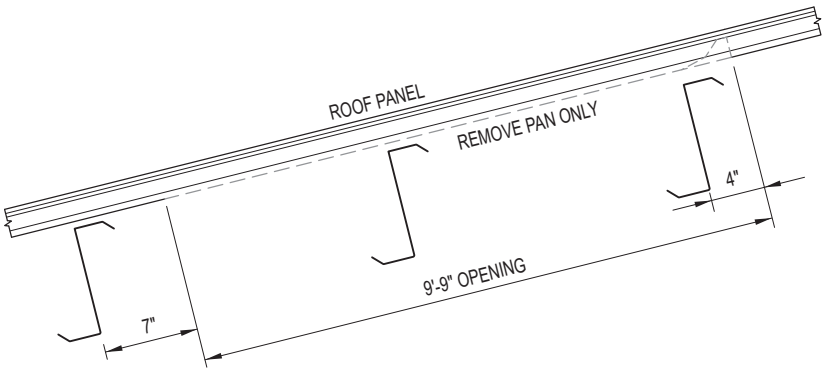

FIELD LOCATED LTP INSTALLATION DIRECTIONS

The Field Located LTP can be installed at any time, either during roof installation or after the roof has been completed. The Field Located LTP may be installed almost anywhere in the roof. The LTP must involve at least two purlin spans and must be at least 5' from the eave, ridge or rake.

Once the Field Located LTP location is determined, verify the exact purlin location at the up slope and down slope ends of the LTP. Cut out the panel flat as shown in the adjacent drawings. At the up slope end only, notch out the panel ribs as shown.

The opening for an LTP on a roof with 5' purlin spacing will measure 9'-9" long by 18" wide. The opening at the down slope end will be 7" from the web of the purlin. The opening at the up slope end will be 4" from the web of the purlin.

CAUTION

It is the user's responsibility to ensure that the installation and use of all light transmitting panels comply with State, Federal and OSHA regulations and laws, including, but not limited to, guarding all light transmitting panels with screens, fixed standard railings, or other acceptable safety controls that prevent fallthrough.

SPECIAL ERECTION TECHNIQUES double-lok®

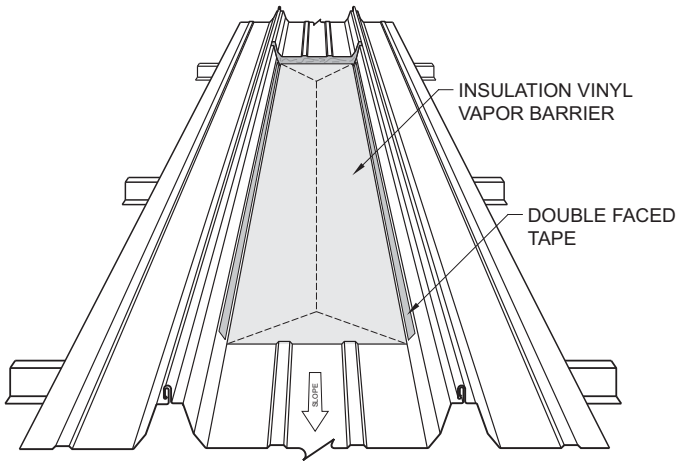

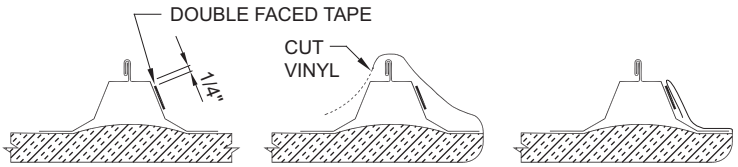

STEP A **STEP B** **STEP C**

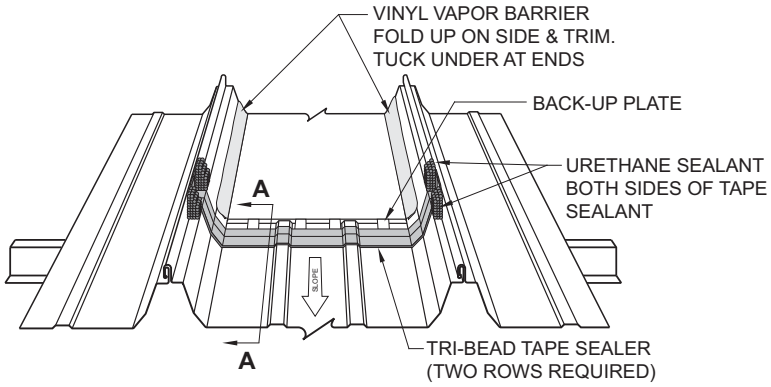

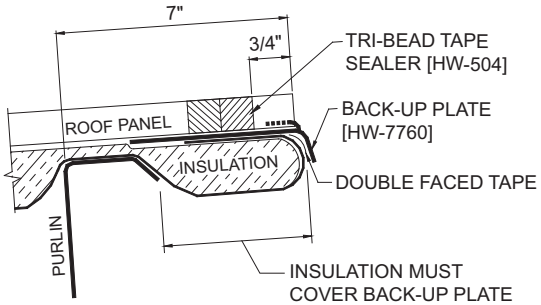

SECTION A-A

FIELD LOCATED LTP INSTALLATION DIRECTIONS

(CONTINUED)

After the metal has been removed from the LTP opening, remove the exposed fiberglass insulation without damaging the vinyl vapor barrier. This can be aided by carefully running the blade of a utility knife along the edge of the metal at the opening. Do not penetrate the vapor barrier.

Apply double-faced tape along the side of the panel trapezoid, on both sides of the opening as shown in Step A. Pull the vapor barrier over the panel ribs, then cut vinyl vapor barrier as indicated by the dotted lines as shown in step B. Fold vapor barrier and push tightly to the double-faced tape as shown in Step C. At both the up slope and down slope ends, the vapor barrier should be tucked under the metal panel.

At the down slope end of the opening, install a back-up plate onto the end of the roof panel, then install two rows of Tri-Bead tape sealant across the width of the panel. The up slope edge of the tape sealant should be ¾" down slope from the edge of the opening. Apply a liberal bead of urethane sealant across the tape sealant at the panel seam on either side of the opening.

CAUTION

It is the user's responsibility to ensure that the installation and use of all light transmitting panels comply with State, Federal and OSHA regulations and laws, including, but not limited to, guarding all light transmitting panels with screens, fixed standard railings, or other acceptable safety controls that prevent fallthrough.

double-lok® SPECIAL ERECTION TECHNIQUES

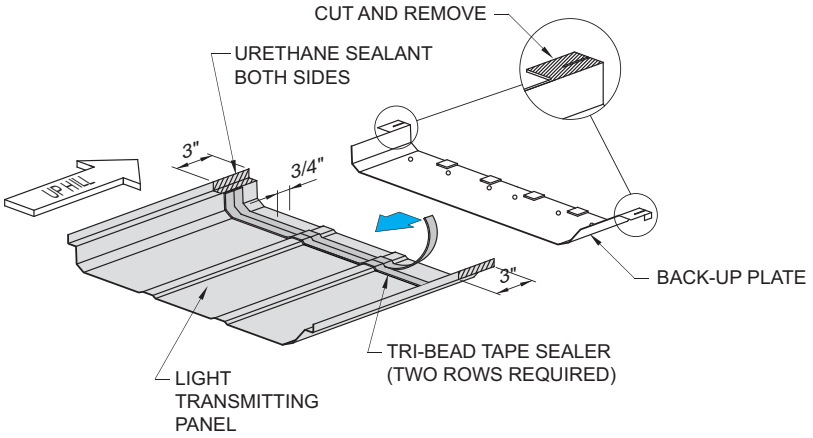

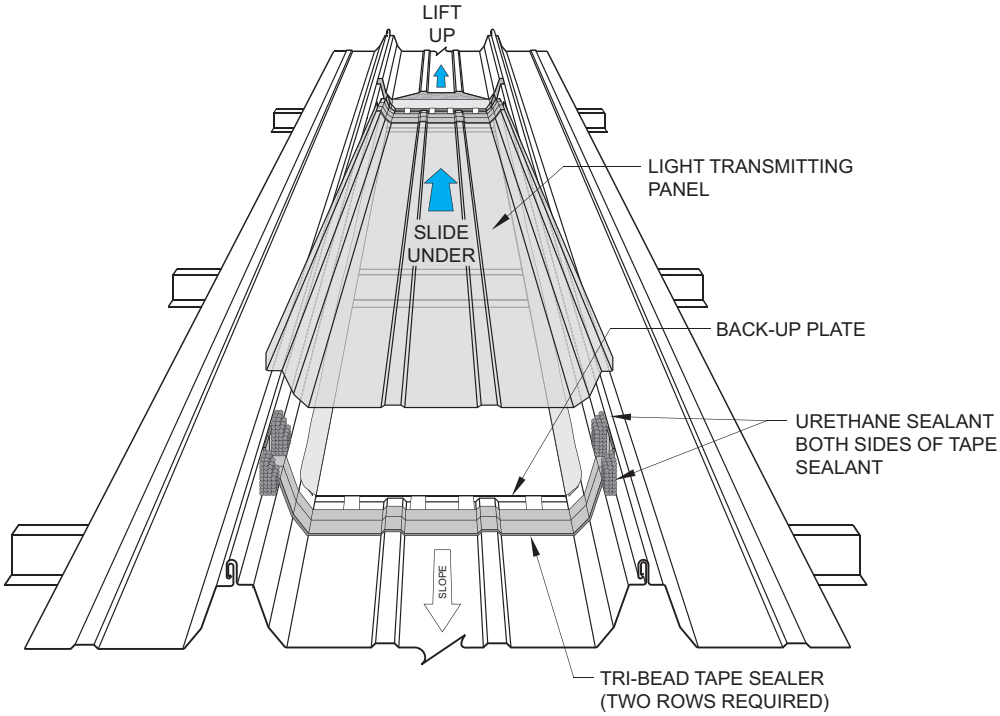

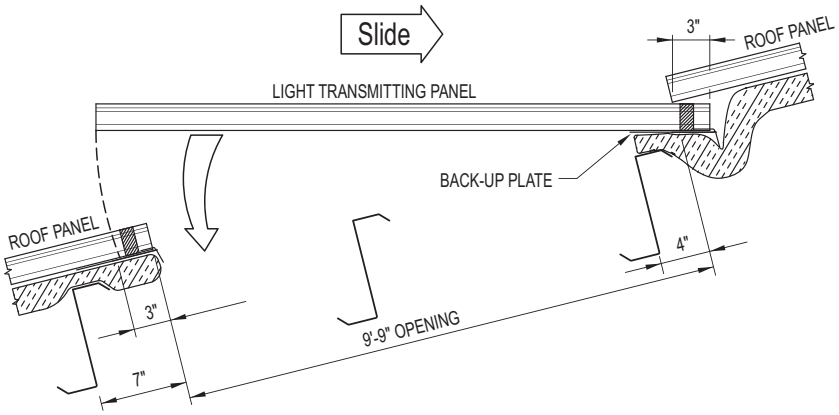

FIELD LOCATED LTP INSTALLATION DIRECTIONS

(CONTINUED)

At the up slope end of the LTP, install two rows of Tri-Bead tape sealant across its width, up to the horizontal shelf of the trapezoid. The up slope edge of the top run of tape sealant should be ¾" from the edge of the LTP. Apply a 3" long bead of urethane sealant that covers the rest of the rib of the LTP and marries to the tape sealant. This should be done on both sides of the LTP.

Cut the "engagement flanges" off of both sides of a back-up plate and install onto the up slope end of the LTP.

Lift the metal roof panel at the upslope end of the opening. While the metal panel is lifted up, slide the up slope end of the LTP (with the back-up plate engaged on it) under the metal panel for 3". Once the 3" end lap has been achieved at the up slope end, lower the down slope end of the LTP onto the metal panel.

CAUTION

Do not step on the LTP panel. It is not designed to support the weight of a person.

CAUTION

It is the user's responsibility to ensure that the installation and use of all light transmitting panels comply with State, Federal and OSHA regulations and laws, including, but not limited to, guarding all light transmitting panels with screens, fixed standard railings, or other acceptable safety controls that prevent fallthrough.

SPECIAL ERECTION TECHNIQUES double-lok®

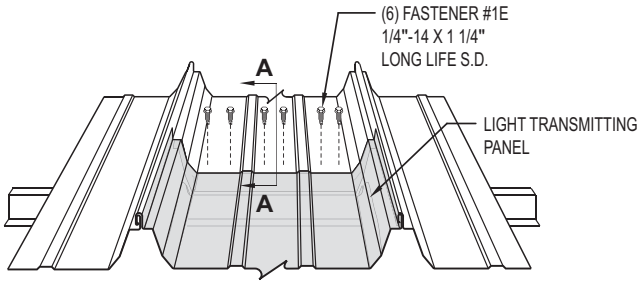

UP SLOPE END OF LTP PANEL

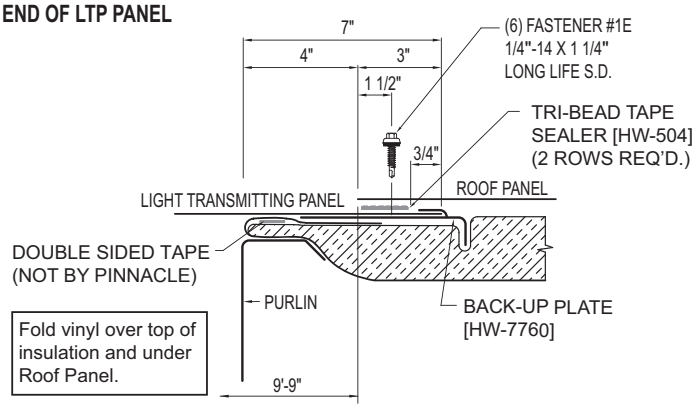

SECTION A - A

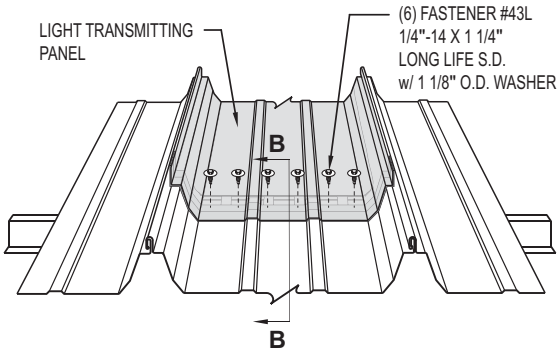

DOWN SLOPE END OF LTP PANEL

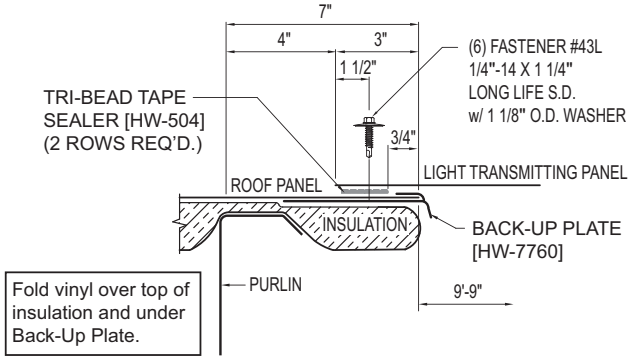

SECTION B - B

FIELD LOCATED LTP INSTALLATION DIRECTIONS

(CONTINUED)

At the up slope end of the LTP, install six #1E fasteners through the metal panel, LTP and into the back-up plate. Fasteners should be 1 ½" up slope from the edge of the metal panel and spaced evenly across the flat of the panel as shown in the top two drawings.

At the down slope end of the LTP, install six #43L fasteners through the LTP, the metal panel and into the back-up plate. Fasteners should be 1 ½" up slope from the edge of the LTP and spaced evenly across the flat of the panel as shown in the bottom two drawings.

CAUTION

It is the user's responsibility to ensure that the installation and use of all light transmitting panels comply with State, Federal and OSHA regulations and laws, including, but not limited to, guarding all light transmitting panels with screens, fixed standard railings, or other acceptable safety controls that prevent fallthrough.

double-lok® SPECIAL ERECTION TECHNIQUES

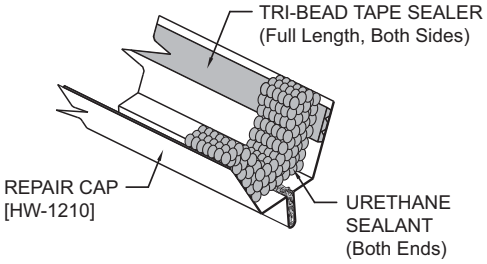

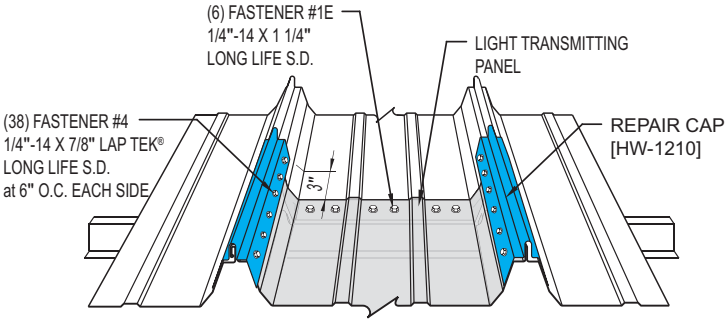

UP SLOPE END OF LTP PANEL

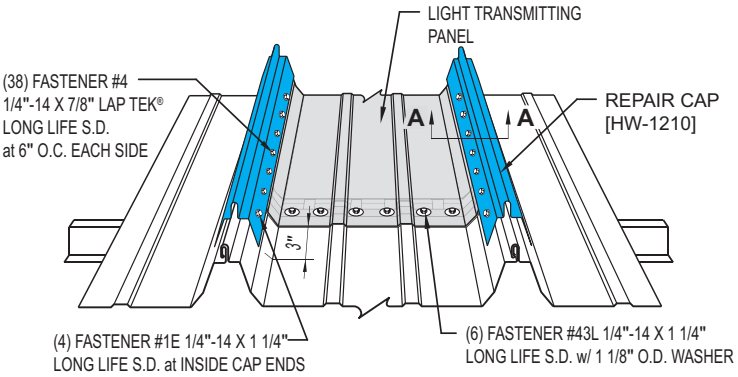

DOWN SLOPE END OF LTP PANEL

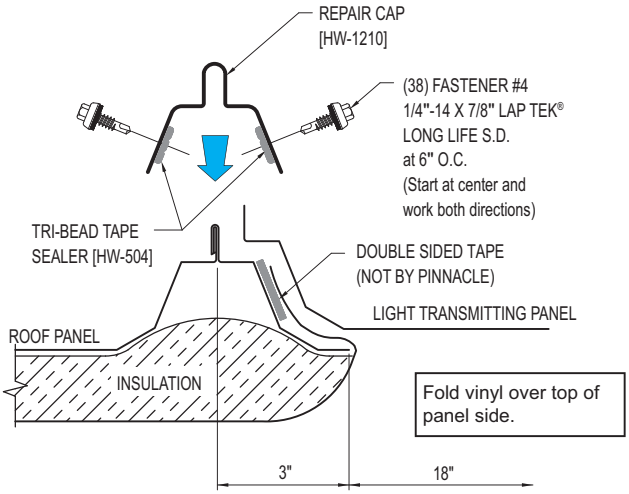

SECTION A - A

FIELD LOCATED LTP INSTALLATION DIRECTIONS

(CONTINUED)

Install Tri-Bead tape sealant on the inside and along the full length of two repair caps. At each end of both repair caps, apply a liberal amount of urethane sealant in the rib and up both sides.

Install the repair caps to either side of the LTP. The repair caps should extend past the LTP an equal distance at both ends. While putting moderate foot pressure on the repair cap, install Fastener #4 at 6" on center. Fastener must penetrate through the tape sealant on the inside of the repair cap and into panel side cinching repair cap tight. It is best to pre-mark the fastener locations and start in the middle of the repair cap and work towards both ends installing the fasteners.

When repair caps are attached, inspect the up slope end of each to insure that the urethane sealant completely sealed the repair cap to the panel and that there are no voids. If any voids are found, inject more urethane sealant into the area and finger wipe.

CAUTION

It is the user's responsibility to ensure that the installation and use of all light transmitting panels comply with State, Federal and OSHA regulations and laws, including, but not limited to, guarding all light transmitting panels with screens, fixed standard railings, or other acceptable safety controls that prevent fallthrough.

RIDGE VENTILATOR INSTALLATION

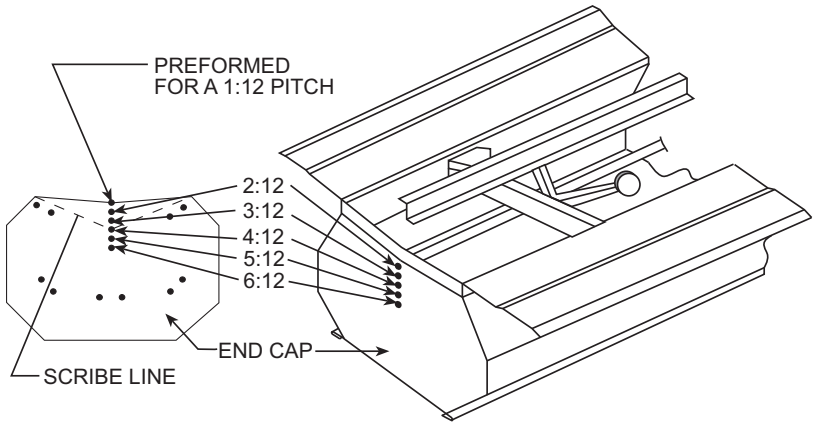

NOTE

Pinnacle does not recommend the use of a ridge ventilator on standing seam roof systems. Sidewall or endwall exhaust fans or other ventilating methods should be considered. These details are for your convenience only. Only a 9" ridge ventilator can be used with this SSR system. Do not use ridge ventilators on any roof over 200' in width or with a slope less than 1:12 or greater than 6:12.

Turn ventilator over and place gently on its top. Note that the end cap is pre-formed for a 1:12 roof pitch. The five bench mark dots represent 2:12, 3:12, 4:12, 5:12 and 6:12 roof pitches. Draw a line between indicated corners and the appropriate dot for the roof pitch. Cut and remove that portion of the end cap. On 5:12 and 6:12 roof pitches see vent manufacturer's special instructions for the installation of the vent skirt. The end cap is now ready to receive the end skirt.

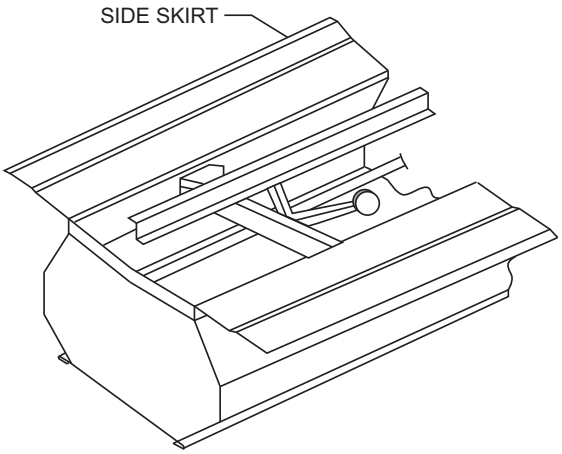

Position end skirt onto end cap. Be sure the down-turned angle of the end skirt is inside of and up against the end cap. Attach end skirt to ventilator end cap with Fastener #4 in four places.

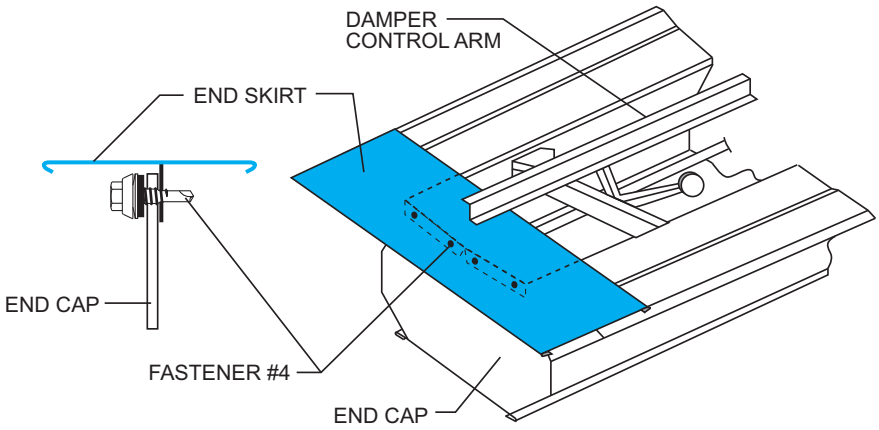

RIDGE VENTILATOR INSTALLATION

(CONTINUED)

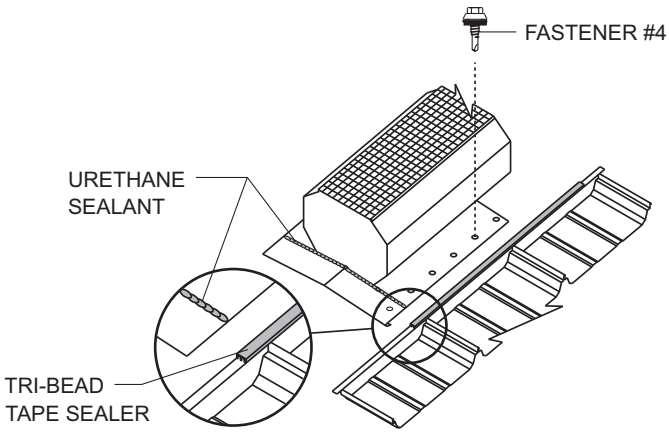

After Tri-Bead tape sealer has been applied to top of outside closures, install ventilator in proper location. Be sure to center in opening. Attach ventilator to outside closures with Fastener #4 on 6" centers. Use tube sealant to seal between the outside of the ventilator and the end skirt.

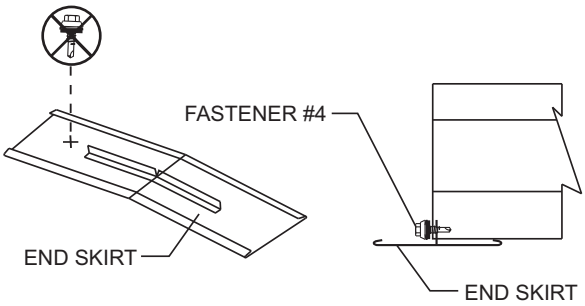

Install the ridge flashing as in Step 16, except for those pieces on either side of ventilator. These will lay on top of, and seal to, the ventilator end skirt with a ridge end cap. Use Tri-Bead tape sealer to seal the ridge end cap to the ridge flashing and the end skirt. Use Fastener #4 to install the end cap. Six fasteners are required to tie the end cap to the ventilator end skirt. Eight fasteners are required to tie the end cap to the ridge flashing.

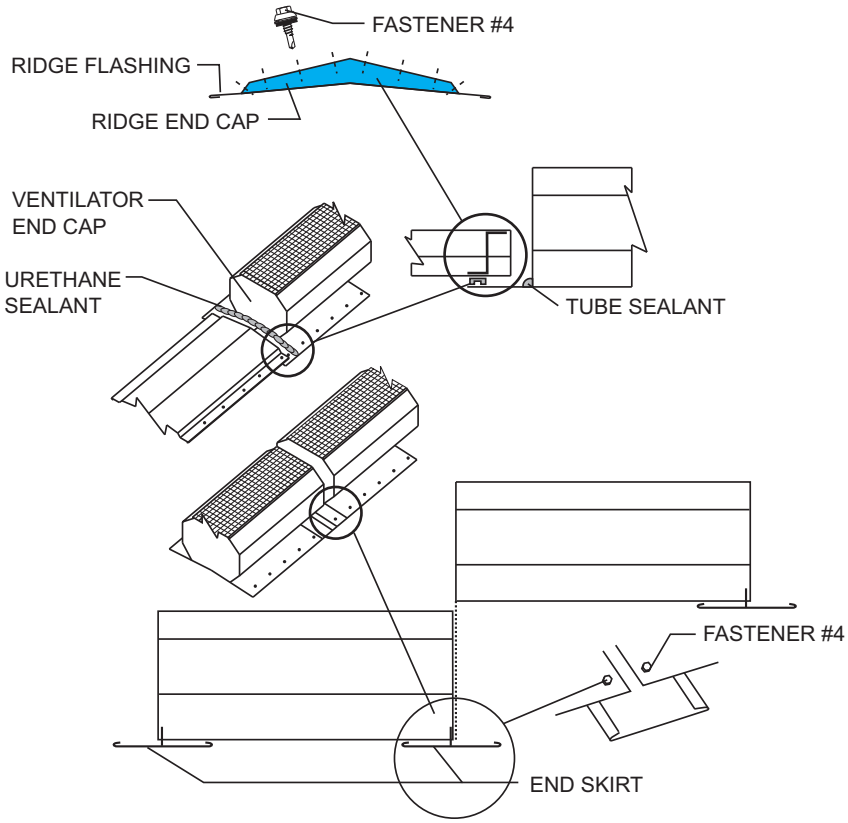

For continuous ventilators, install end skirts on both ends of the first ventilator and one end of all following ventilators. Attach ventilator to outside closures as outlined above. Install an additional Fastener #4 through the corner of the side skirt and into the end skirt.

Do not connect more than 4 vents to the same linkage.

PINNACLE™ STRUCTURES, INC.

SPECIAL ERECTION TECHNIQUES double-lok®

RIDGE VENTILATOR

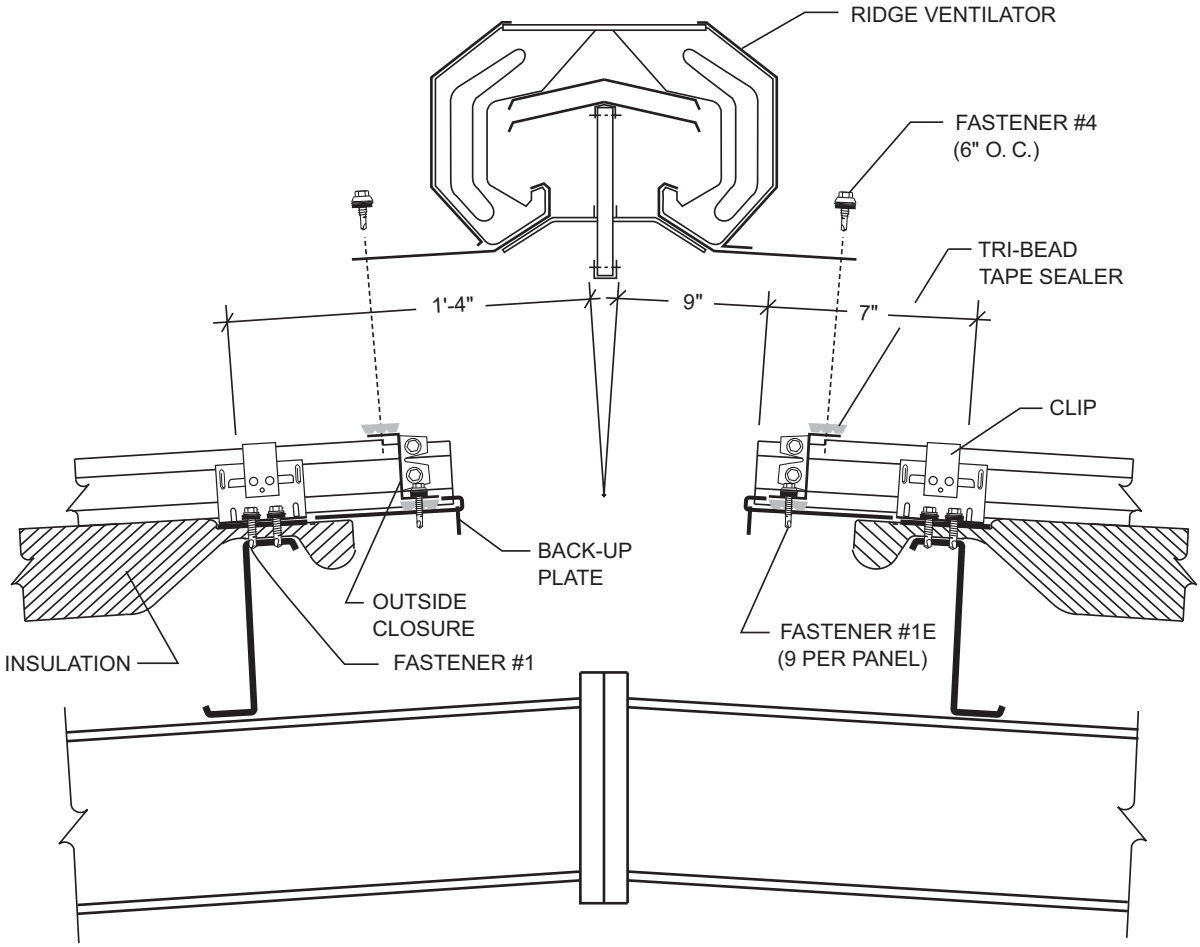

CAUTION

This kit contains two end skirts which must be installed to support the ventilator.

NOTES:
ONLY 9" RIDGE VENTILATORS CAN BE USED WITH THIS SSR SYSTEM. DO NOT USE RIDGE VENTILATORS ON ANY ROOF OVER 200' IN WIDTH OR WITH A SLOPE LESS THAN 1:12 OR GREATER THAN 6:12.

double-lok® SPECIAL ERECTION TECHNIQUES

VENTED RIDGE

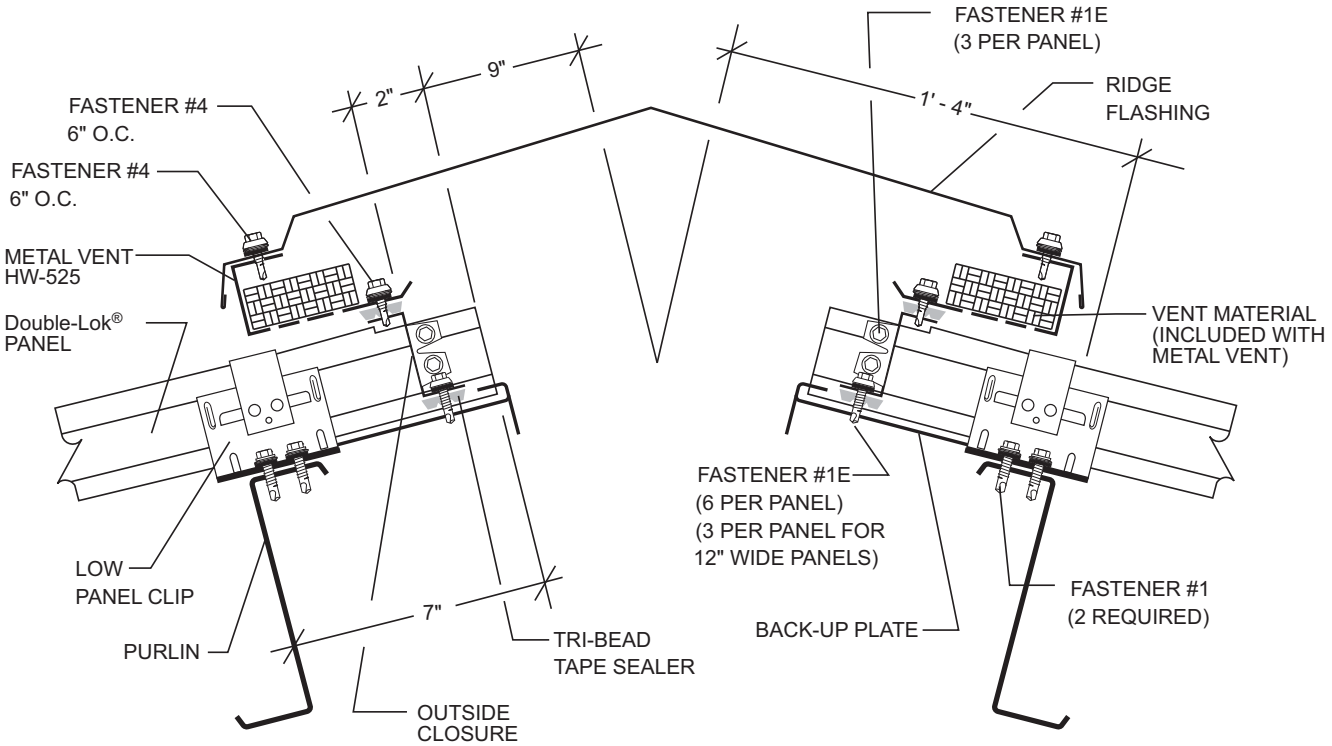

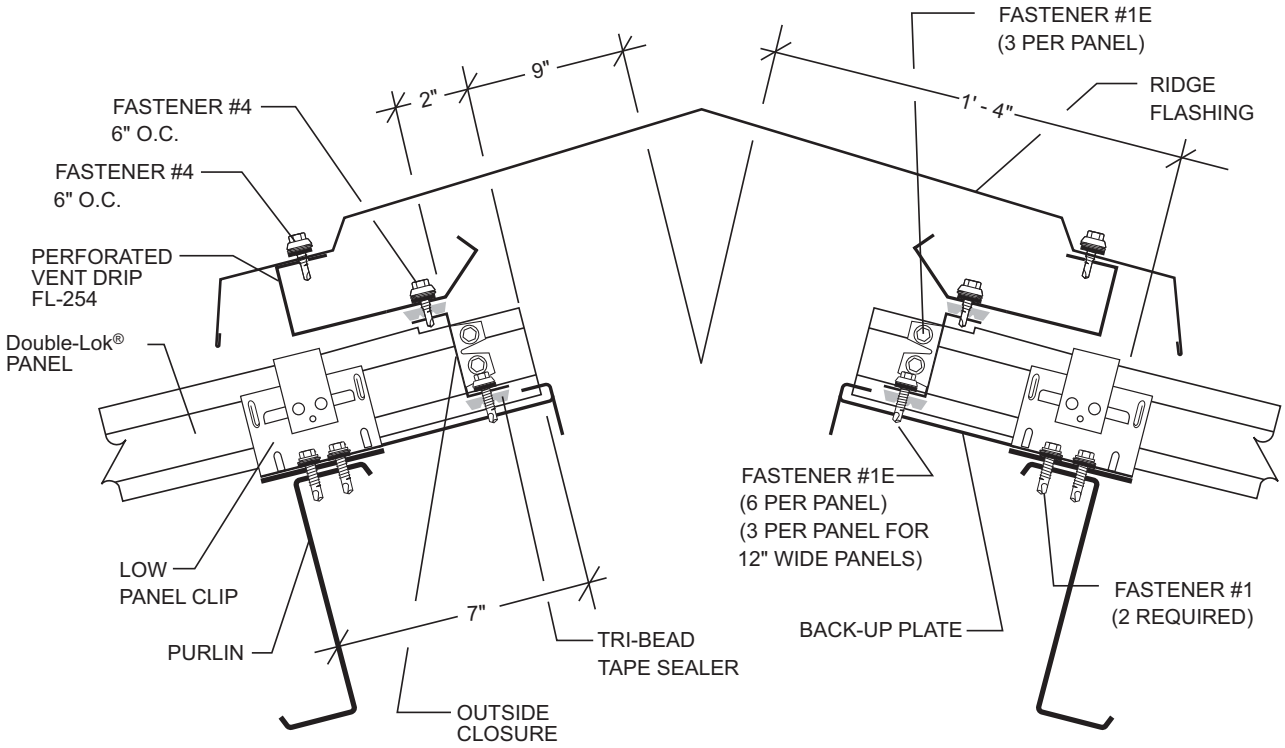

PINNACLE STRUCTURES, INC.

SPECIAL ERECTION TECHNIQUES double-lok®

MID SLOPE FIXED CONDITION

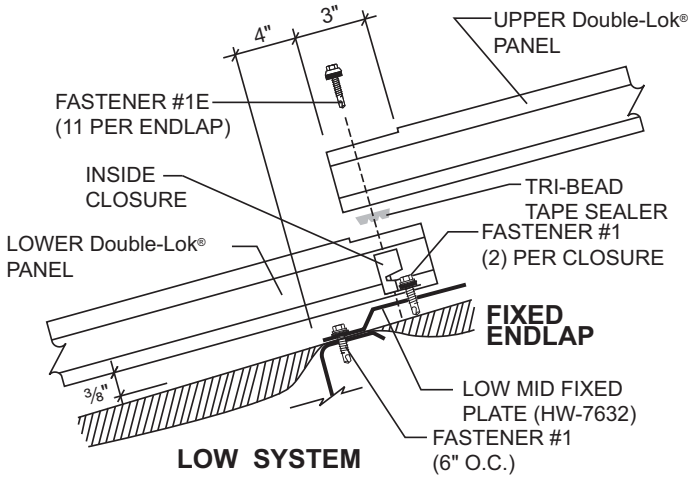

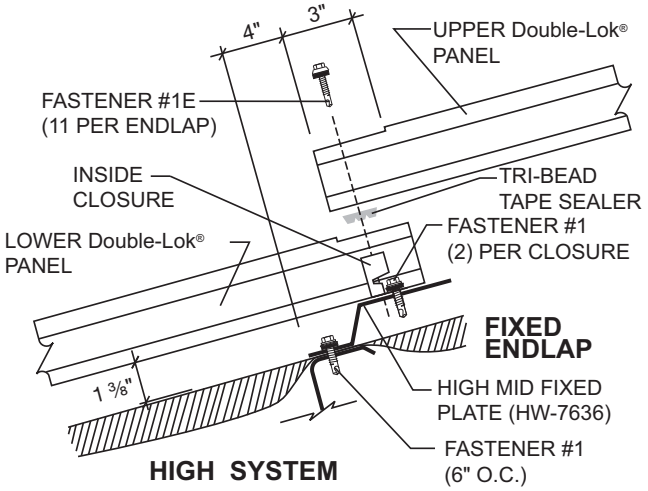

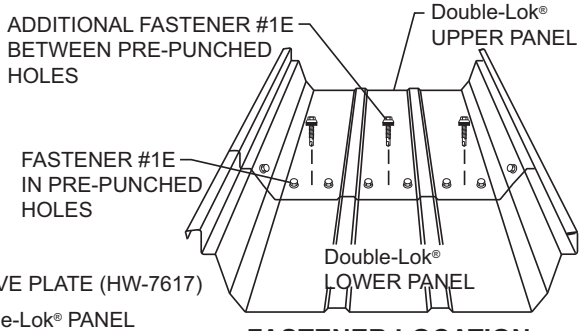

FASTENER LOCATION

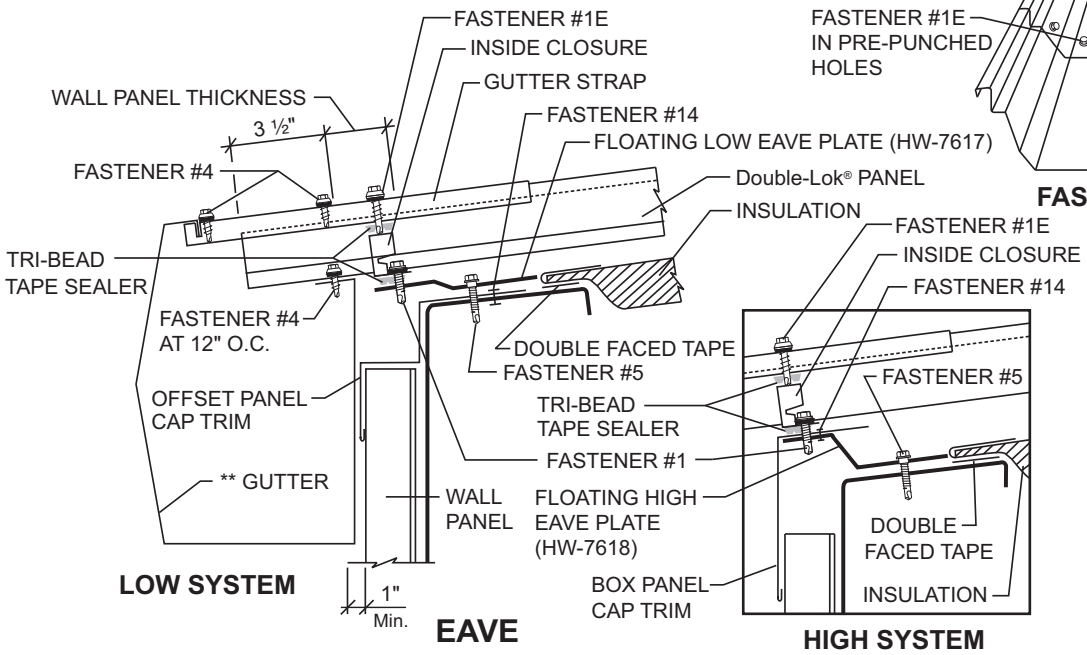

NOTES:

1. This special detail is for use when a panel run exceeds the thermal movement capabilities of the panel clip. Please refer to page DL-3.
2. A positive panel attachment is made at the mid-point in the panel run allowing for thermal movement to the eave and ridge.
3. The standard floating ridge condition must be used in conjunction with this special eave detail.
4. The ***floating eave plate*** must be used to allow for panel movement at the eave.
5. Refer to page DL-2 for maximum clip movement in each direction. Thermal calculations must be performed for each project to ensure that the thermal movement of the roof will not exceed the design of the clips and slot in the special eave plate.

double-lok® SPECIAL ERECTION TECHNIQUES

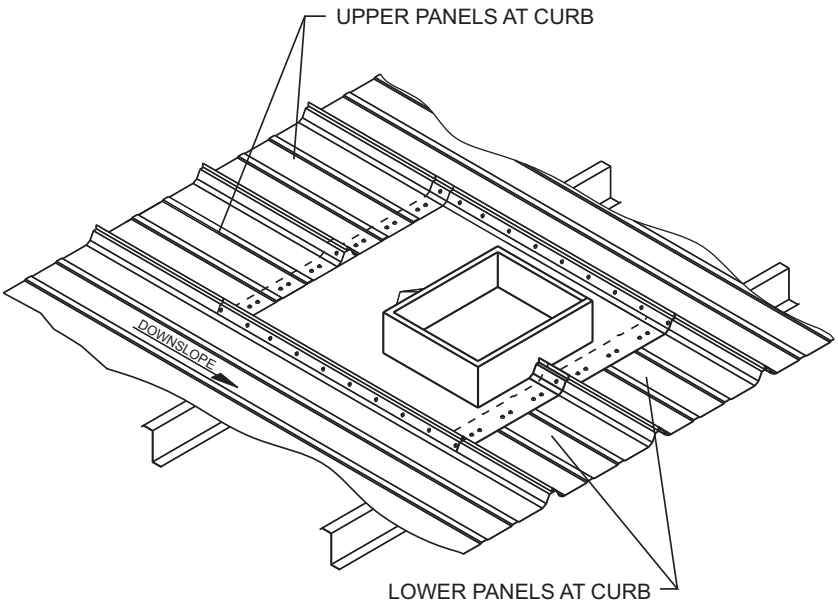

ROOF CURB INSTALLATION

The manufacturer recommends that only onepiece aluminum curbs be used on it's standing seam roof systems. The curb flange is constructed to match the configuration of the panel. The side flange extends to the next natural seam in the roof panel and conforms to the seam configuration. Cap strips, furnished by the curb manufacturer, secure the curb to the roof panels. The roof curb is installed under the roof panels on the upslope end and on top of the roof panels on the downslope end. Support framing should be installed before curb installation. **Back-up plates (for the roof panels at the down slope end of the curb), a floating eave plate (for the upslope end of the curb), long-life fasteners and Triple Bead tape sealer must be ordered for each curb.**

ROOF CURB CROSS SECTION

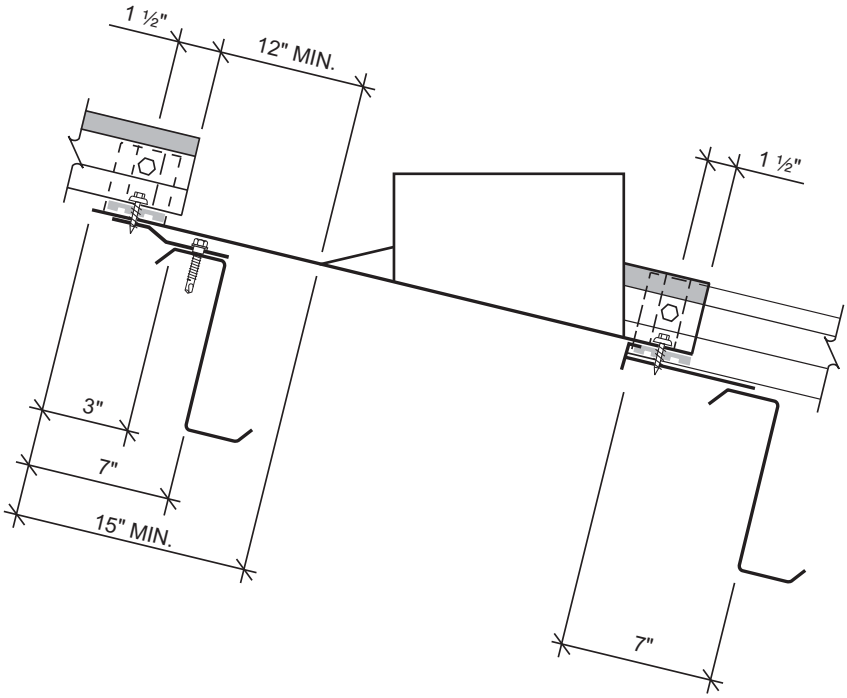

ATTENTION

All curbs must be installed over support framing, supplied by the metal building manufacturer or the curb supplier. Support framing must be properly located to provide “endlap” conditions at the upslope and downslope ends of the curb. Refer to Roof Curb Cross Section for critical dimensions.

CAUTION

It is the user’s responsibility to ensure that openings cut into the roof for installation of roof curbs comply with State, Federal and OSHA regulations and laws, including, but not limited to, guarding roof openings with plywood, fixed standard railings, or other acceptable safety controls that prevent fall-through.

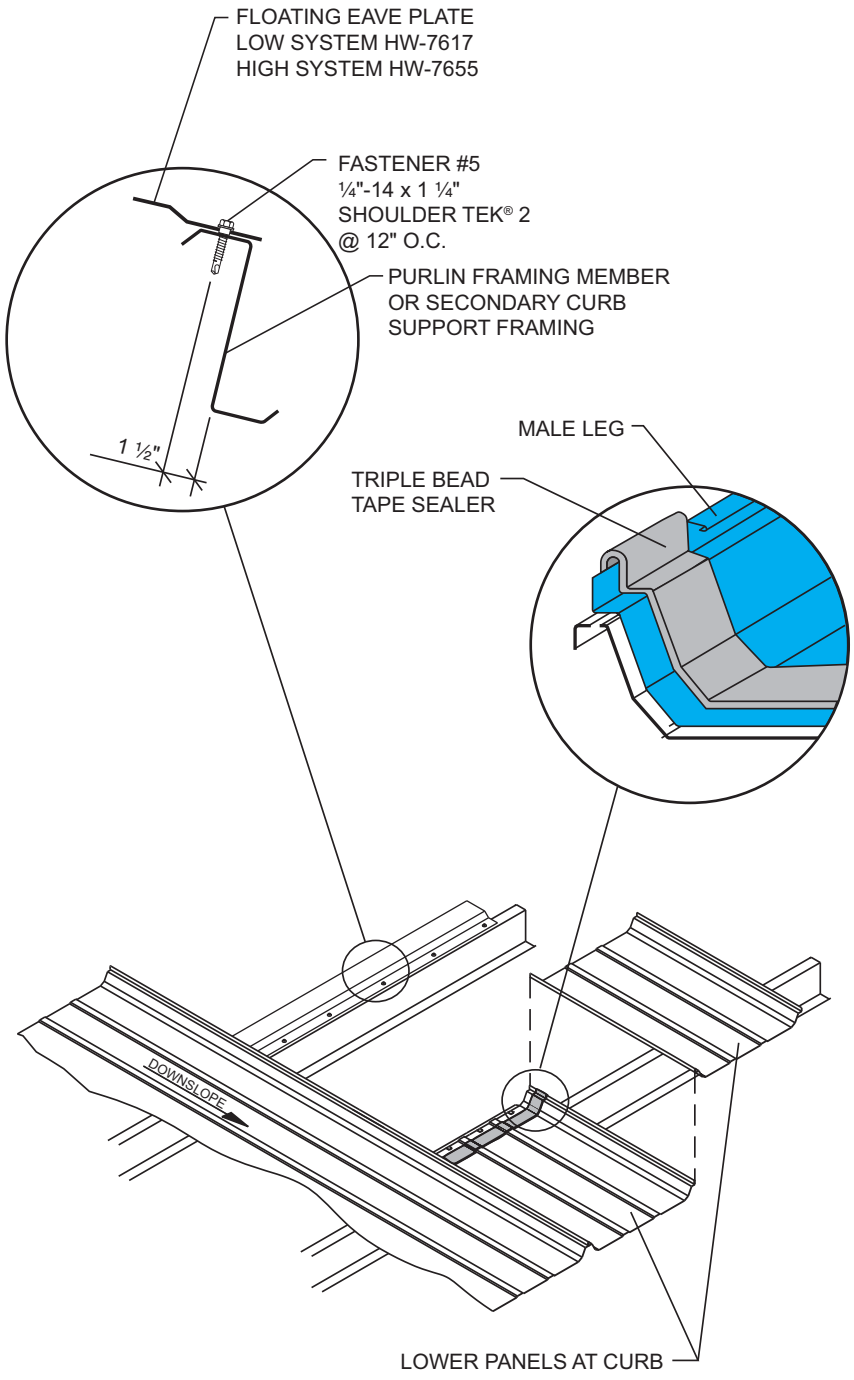

ROOF CURB INSTALLATION

(CONTINUED)

Install curb support framing at curb location. Install full length roof panels up to curb location. Install lower panels at downslope end of curb. **If the lower panels are field cut to length, you must (1) cut the downslope end, leaving a factory cut at the curb end or (2) if the curb end of the panel is field cut, notch the male leg as it is done in the factory.** Place Triple Bead tape sealer across the full width of each panel as it is installed. To determine how far down on the panel to place the tape sealer, temporarily lay the curb in place and mark the down slope edge of the curb on the first panel. This will give you a reference point as to how far down slope to place the tape sealer. **It is critical that the tape sealer be installed across each panel individually so that the tape sealer can be placed over the male leg.** This will provide a seal in the panel seam when the next panel is installed. Install back-up plates onto each of the lower panels.

ATTENTION

All curbs must be installed over support framing, supplied by the metal building manufacturer or the curb supplier. Support framing must be properly located to provide "endlap" conditions at the upslope and downslope ends of the curb. Refer to Roof Curb Cross Section for critical dimensions.

CAUTION

It is the user's responsibility to ensure that openings cut into the roof for installation of roof curbs comply with State, Federal and OSHA regulations and laws, including, but not limited to, guarding roof openings with plywood, fixed standard railings, or other acceptable safety controls that prevent fall-through.

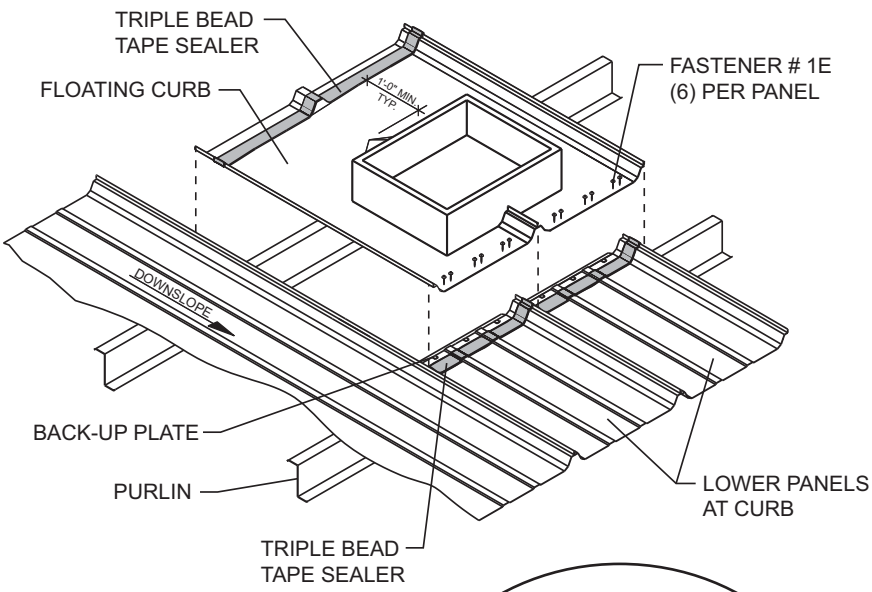

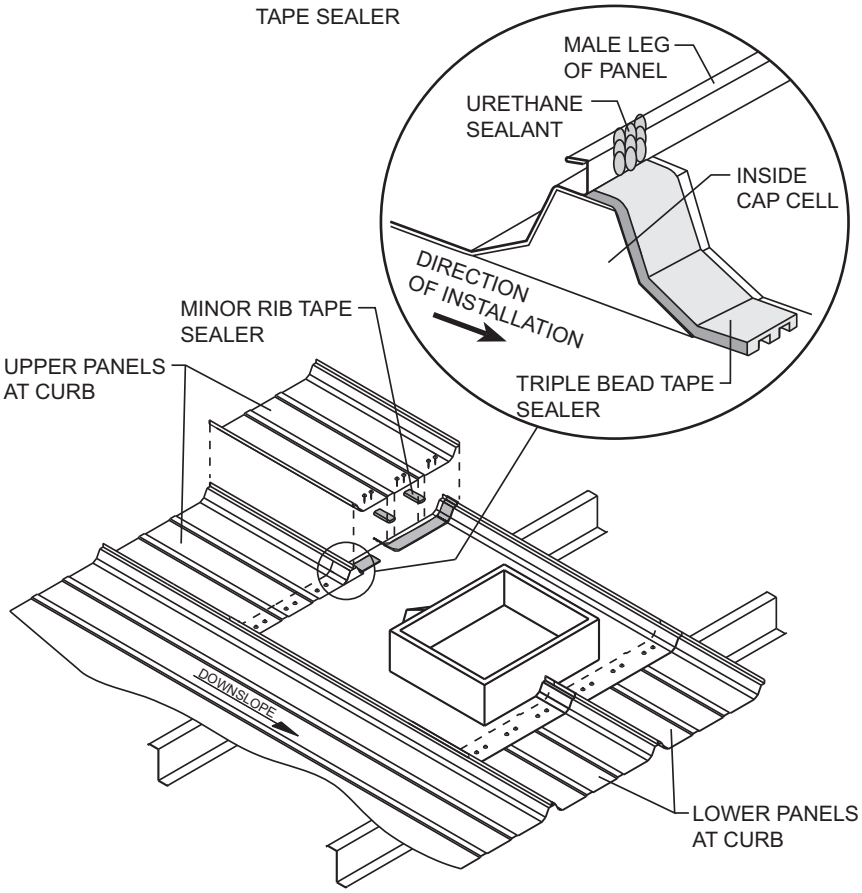

ROOF CURB INSTALLATION

(CONTINUED)

Install the roof curb on top of the lower roof panels and the curb support framing. Do not attach the curb to the support framing as this may prevent the curb from floating with the roof. Fasten the down slope end of the roof curb to the lower roof panels and back-up plates with Fastener #1E as at a standard endlap. This will require six fasteners in the pan of the panel and one in each trapezoid for a total of eight fasteners per panel. Fasteners must go through the Triple Bead tape sealer.

Install Triple Bead tape sealer across the width of the upslope end of the roof curb. Use the down slope end of the inside cap cell, which is welded to the roof curb, as a guide for placement of the tape sealer.

Apply minor rib tape sealer to the underside of the minor ribs on the down slope end of the upper panels. Install the upper panels with Fastener #1E as at a standard endlap. This will require six fasteners in the pan of the panel and one in each trapezoid for a total of eight fasteners per panel. Fasteners must go through the Triple Bead tape sealer. The down slope edge of these panels should be flush with the down slope edge of the inside cap cell. Apply urethane sealant to the male leg of all panels directly over the inside cap cell. This will prevent water infiltration through the end of the panel seam.

CAUTION

It is the user's responsibility to ensure that openings cut into the roof for installation of roof curbs comply with State, Federal and OSHA regulations and laws, including, but not limited to, guarding roof openings with plywood, fixed standard railings, or other acceptable safety controls that prevent fall-through.

SPECIAL ERECTION TECHNIQUES double-lok®

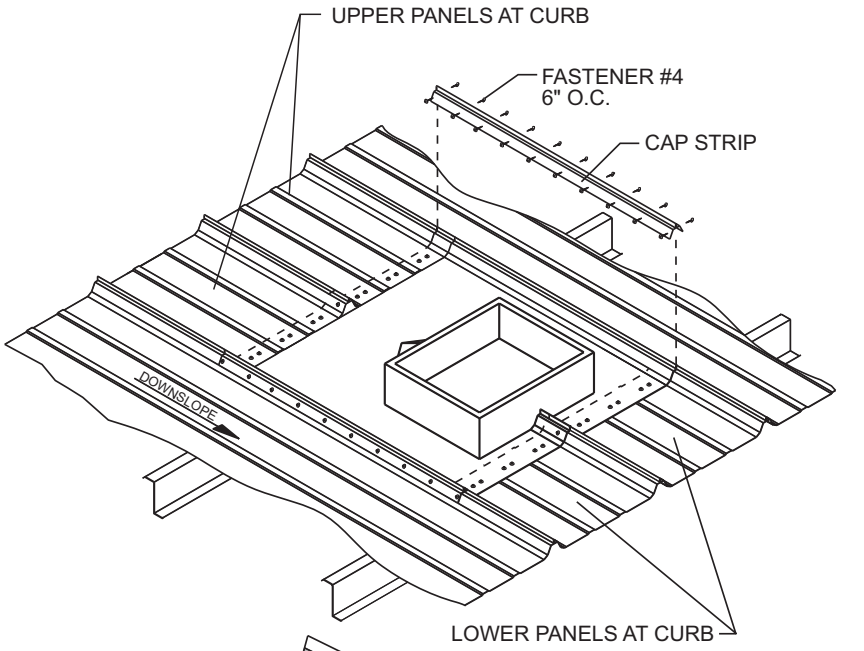

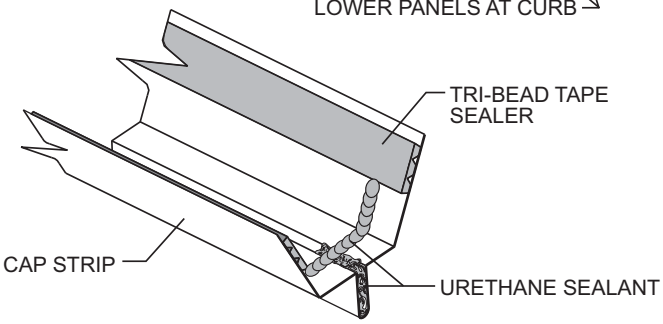

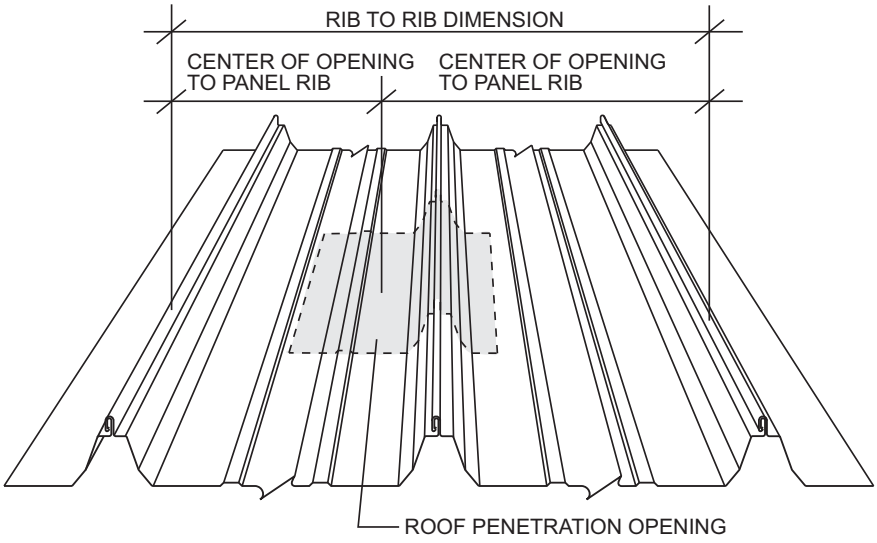

ROOF CURB INSTALLATION

(CONTINUED)

After all upper panels have been installed, install full length panel at side of curb. This panel will engage the male leg of the adjacent upper and lower panels. The female leg of this full length panel will overlap the leg of the roof curb.

Cap strips will be installed, full length, along both sides of the curb to seal the curb to the roof panels. Turn the cap strips upside down and install Tri-Bead tape sealer to both sides and along the full length of the cap strip. Lower edge of tape sealer should be flush with the lower edge of the cap strip. Apply a generous bead of urethane sealant at both ends of the seam portion of the cap strip. Install each cap strip over the curb/roof panel sidelap with the lower end of the cap strip even with the lower end of the curb. Force the cap strip down tightly to the curb/roof panel sidelap and fasten both sides with Fastener #4 at 6" on center.

INSTALLING CURB AFTER ROOF INSTALLATION

When curbs must be installed in an exact location, the curb support framing can be installed before beginning the roof. When a curb is to be added after the roof is installed, the curb framing must be installed from below the roof after the roof panels have been cut for installation of the curb.

After roof is installed, identify the exact location for the curb. Measure from the center of the required opening to the nearest panel rib in each direction. Also, determine how many panels will be affected by the curb (minimum clearance between vertical wall of curb opening and panel rib is 6") and measure from center of rib of first panel affected to center of rib of last panel affected (if 24" panel module was not held during roof installation, this dimension will be critical). This information will be required to fabricate the curb so that it will fit the location exactly.

CAUTION

It is the user's responsibility to ensure that openings cut into the roof for installation of roof curbs comply with State, Federal and OSHA regulations and laws, including, but not limited to, guarding roof openings with plywood, fixed standard railings, or other acceptable safety controls that prevent fall-through.

INSTALLING CURB AFTER ROOF INSTALLATION

(CONTINUED)

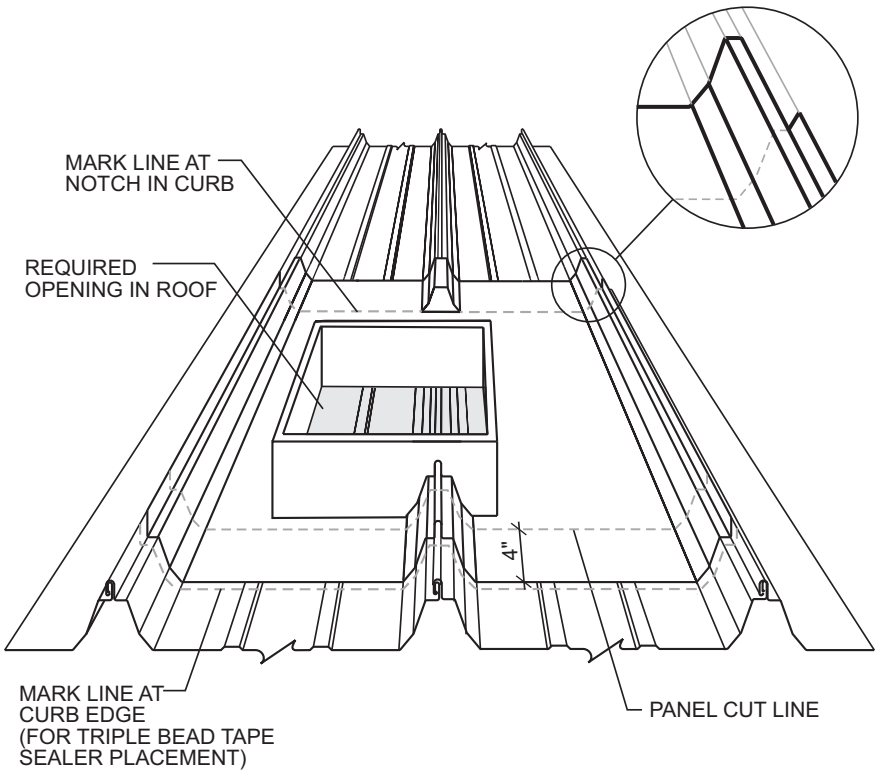

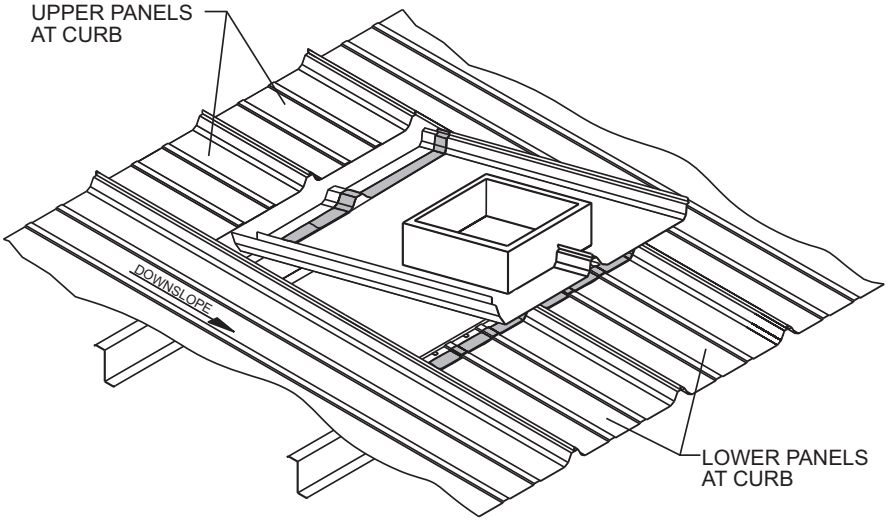

Once curb is ready to be installed, lay curb on roof and align opening in the curb with the exact location the opening is required in the roof. At the up slope end of the roof curb, the roof panels will be cut on a line even with the beginning of the notch at the vertical leg on each side of the roof curb. Secondly, trace a line along the down slope edge of the roof curb. The roof panels will be cut on a line 4" up slope from this line.

Cut roof panels from rib of first panel affected by curb, to rib of last panel affected, along the top and bottom cut lines previously marked.

At the down slope end of the roof opening, install back-up plates onto the ends of the cut roof panels and Triple Bead tape sealer across the full width of these roof panels. The down slope edge of the tape sealer should be on the line previously traced along the downslope edge of the roof curb. The up slope edge of the tape sealer will be approximately 1 ½" from the end of the cut panel.

Apply Triple Bead tape sealer across the full width of the up slope end of the roof curb. The down slope edge of the tape sealer will align with the down slope edge of the inside cap cells welded to the roof curb.

Install the roof curb under the roof panels at the up slope end and on top of the panels at the down slope end. This will require that you lift the roof panels up slightly at the up slope end to allow the upper flange of the roof curb to slide under the panels. Spray some soapy water on the tape sealer to prevent it from sticking to the roof panels until you have the curb completely in place.

CAUTION

It is the user's responsibility to ensure that openings cut into the roof for installation of roof curbs comply with State, Federal and OSHA regulations and laws, including, but not limited to, guarding roof openings with plywood, fixed standard railings, or other acceptable safety controls that prevent fall-through.

INSTALLING CURB AFTER ROOF INSTALLATION

(CONTINUED)

Cap strips will be installed, full length, along both sides of the curb to seal the curb to the roof panels. Turn the cap strips upside down and install Tri-Bead tape sealer to both sides and along the full length of the cap strip. Lower edge of tape sealer should be flush with the lower edge of the cap strip. Apply a generous bead of urethane sealant at both ends of the seam portion of the cap strip. Install each cap strip over the curb/roof panel sidelap with the lower end of the cap strip even with the lower end of the curb. Force the cap strip down tightly to the curb/roof panel sidelap and fasten both sides with Fastener #4 at 6" on center.

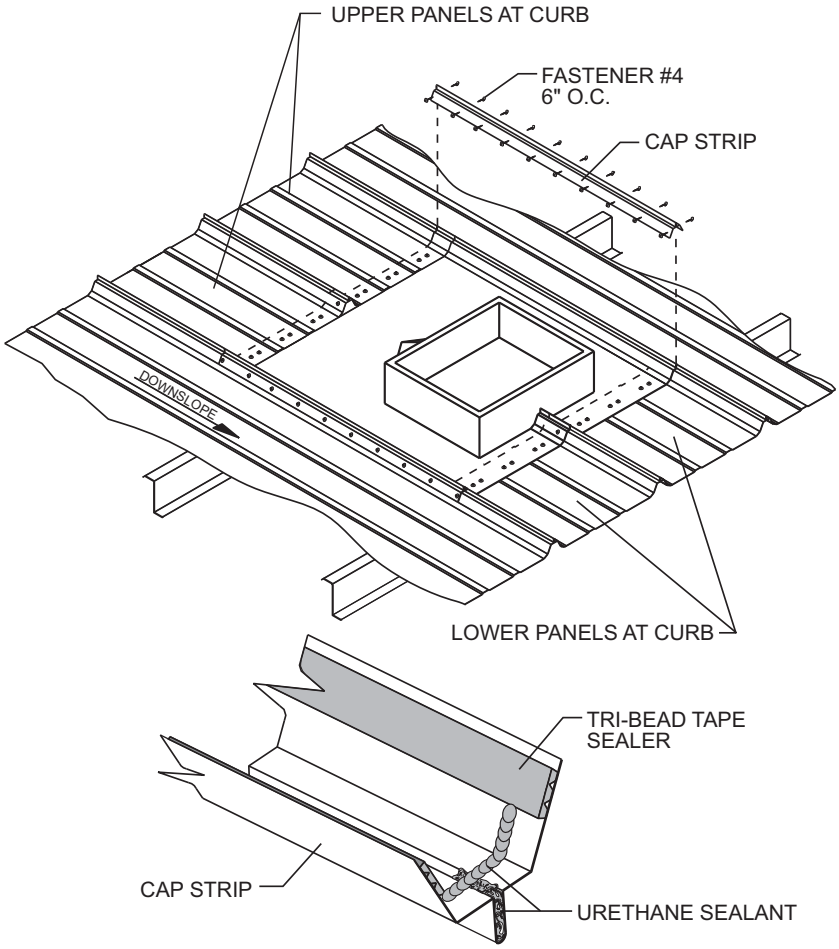

CAUTION

It is the user's responsibility to ensure that openings cut into the roof for installation of roof curbs comply with State, Federal and OSHA regulations and laws, including, but not limited to, guarding roof openings with plywood, fixed standard railings, or other acceptable safety controls that prevent fall-through.

double-lok® SPECIAL ERECTION TECHNIQUES

ROOF CURB CROSS SECTION

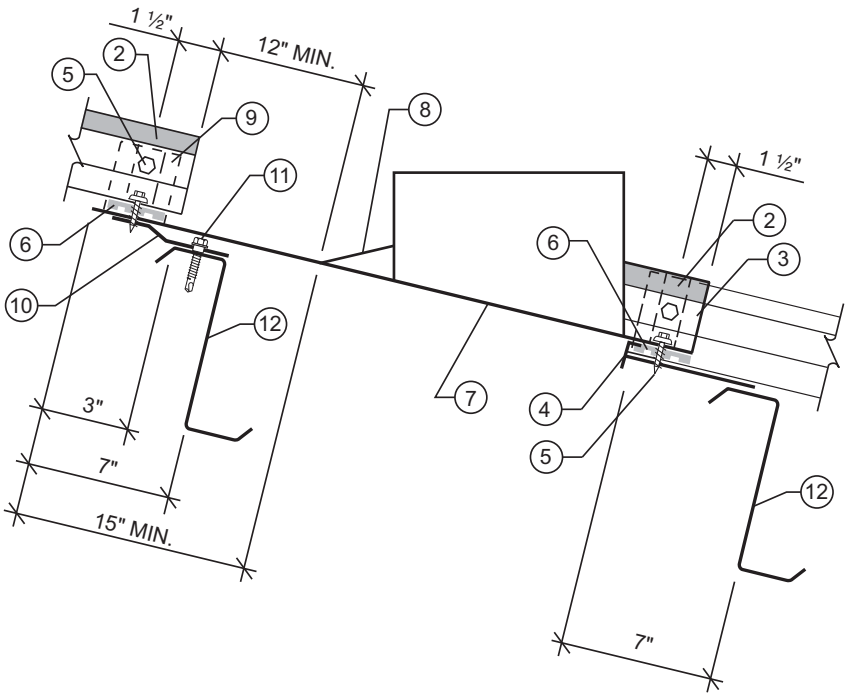

ROOF CURB ISOMETRIC

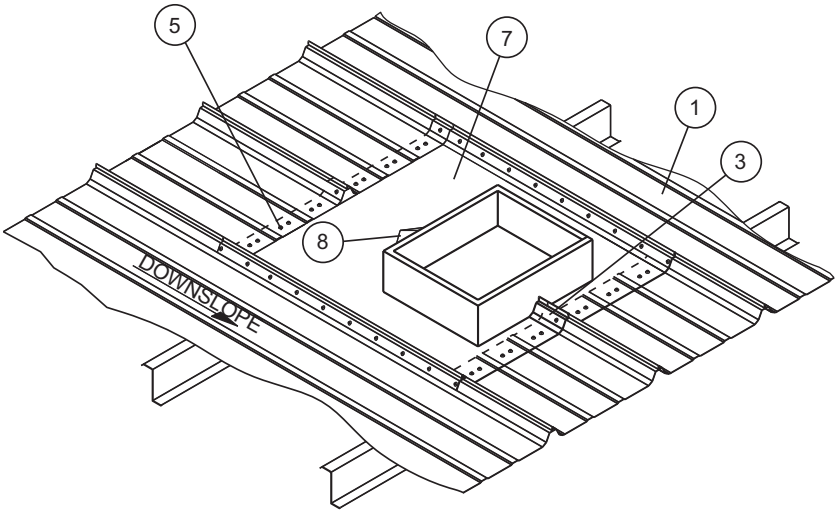

ROOF CURB CROSS SECTION

1. Double-Lok® Panel
2. Urethane Sealant
3. Outside Cap Cell
4. Back-up Plate
5. Fastener #1E
6. Triple Bead Tape Sealer
7. Roof Curb Made From Structural Aluminum (Min. .080 Thickness)
8. Water Diverter
9. Inside Cap Cell
10. Floating Eave Plate
11. Fastener #5
12. Purlin Framing Member or Secondary Curb Support Framing

CAUTION

The above curb type and installation instructions must be used for curbs to be included in a weathertightness warranty.

ATTENTION

All curbs must be installed over support framing, supplied by the metal building manufacturer or the curb supplier. Support framing must be properly located to provide “endlap” conditions at the upslope and downslope ends of the curb. Refer to Roof Curb Cross Section for critical dimensions.

CAUTION

It is the user’s responsibility to ensure that openings cut into the roof for installation of roof curbs comply with State, Federal and OSHA regulations and laws, including, but not limited to, guarding roof openings with plywood, fixed standard railings, or other acceptable safety controls that prevent fall-through.

PINNACLE STRUCTURES. INC.

SPECIAL ERECTION TECHNIQUES double-lok®

PIPE PENETRATION INSTALLATION RECOMMENDED SMALL AND LARGE PIPE PENETRATION INSTALLATION

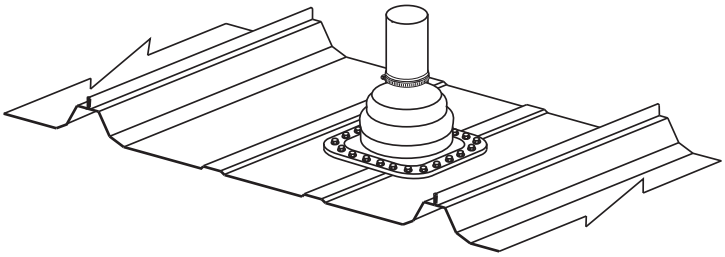

RIGHT WAY

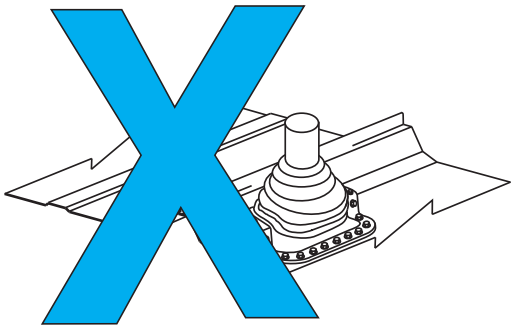

WRONG WAY

RECOMMENDED SMALL PIPE PENETRATION INSTALLATION

INSTALL PIPE IN CENTER OF PANEL TO ALLOW BASE OF RUBBER ROOF JACK TO LAY FLAT ON PANEL.

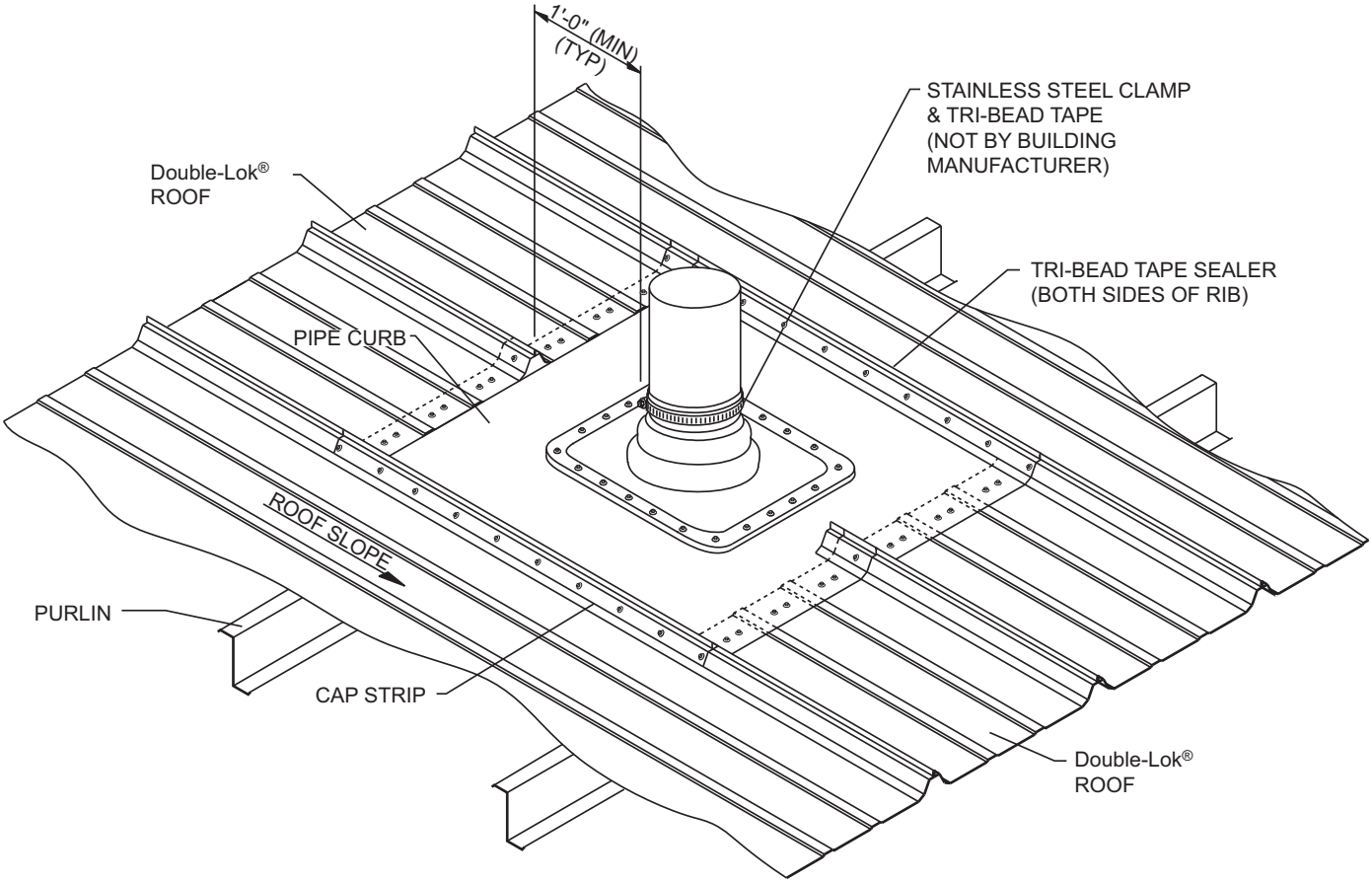

RECOMMENDED LARGE PIPE PENETRATION INSTALLATION

THIS METHOD TO BE USED IN ALL CASES WHERE A PIPE PENETRATION INTERSECTS A PANEL RIB OR WHEN THE PIPE IS TOO LARGE AND WILL NOT ALLOW ADEQUATE WATER FLOW DOWN THE PANEL.

PIPE PENETRATION INSTALLATION
DECK-TIGHT INSTALLATION

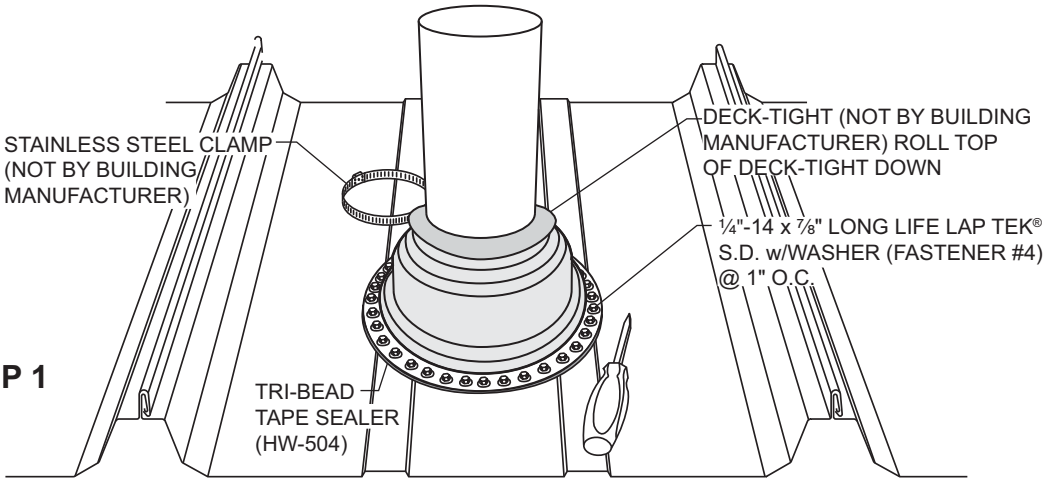

STEP 1

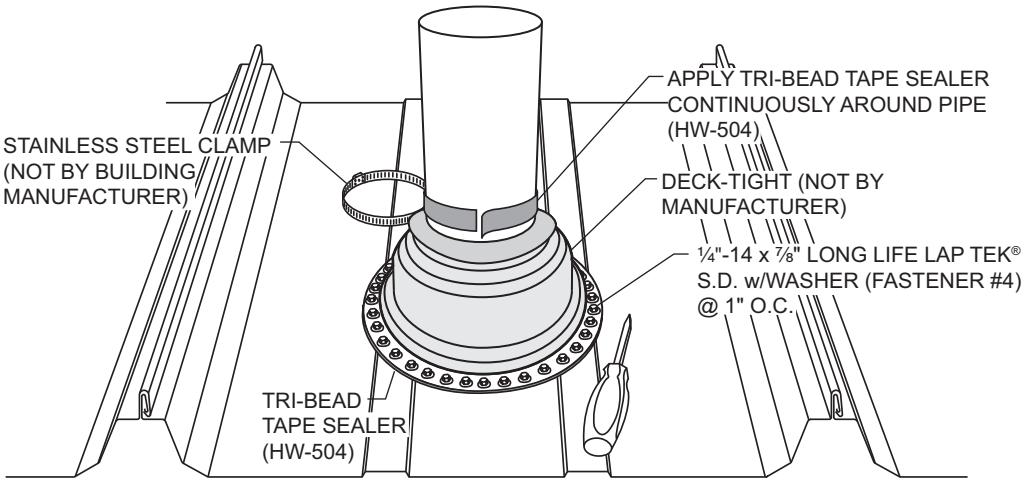

STEP 2

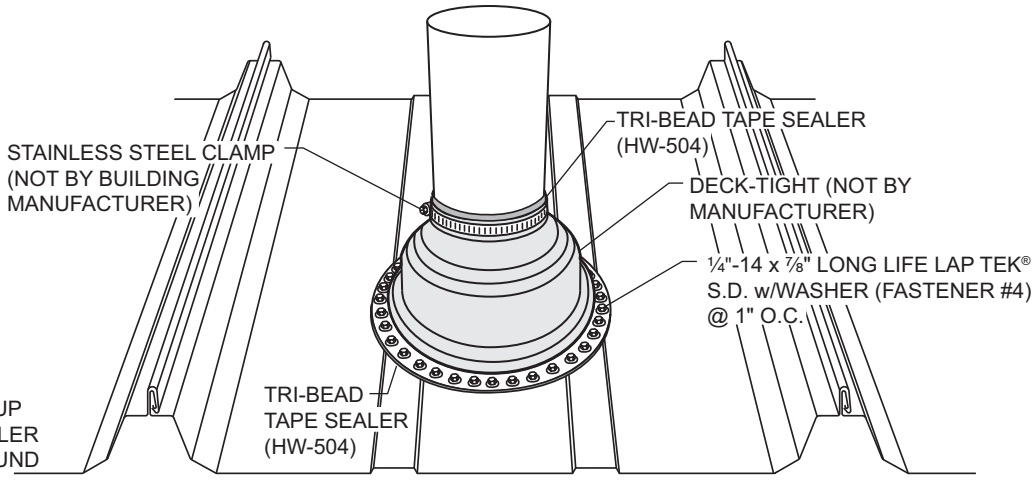

STEP 3

NOTE: ROLL DECK-TIGHT UP OVER TRI-BEAD TAPE SEALER AND SECURE CLAMP AROUND TOP OF DECK-TIGHT

SPECIAL ERECTION TECHNIQUES double-lok®

Double-Lok® REPAIR CAP INSTALLATION

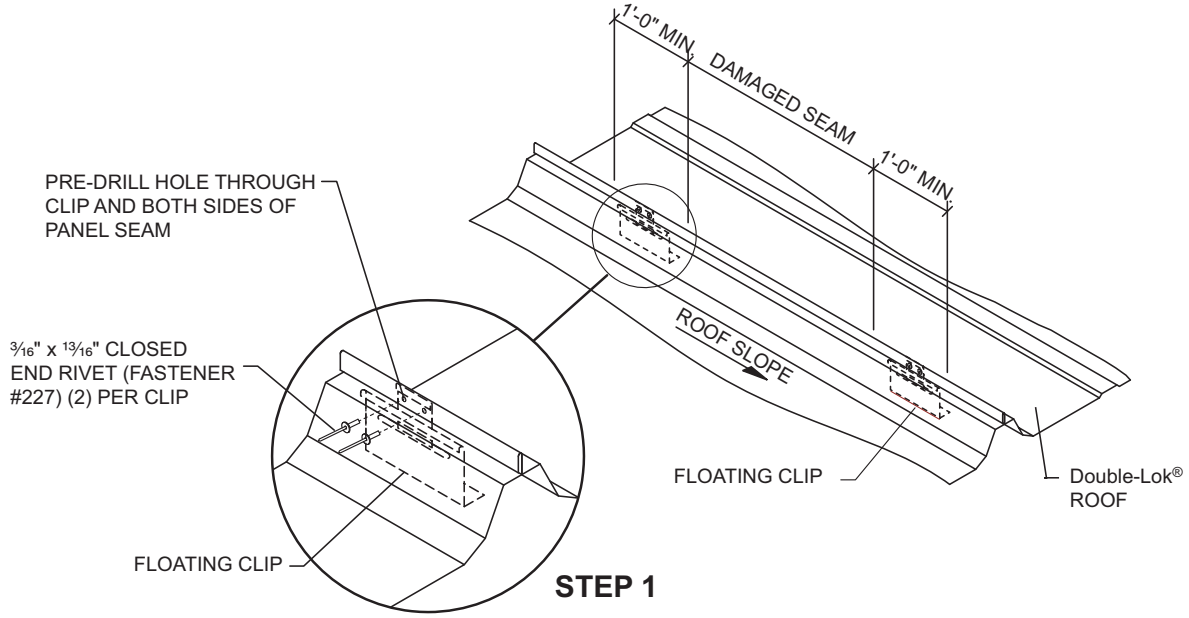

STEP 1

1. Repair cap must extend 1'-0" above and below the damaged area.
2. 3⁄16" x 13⁄16" closed end rivet fastened through each clip and both sides of panel rib in damaged area. (2 required per clip)

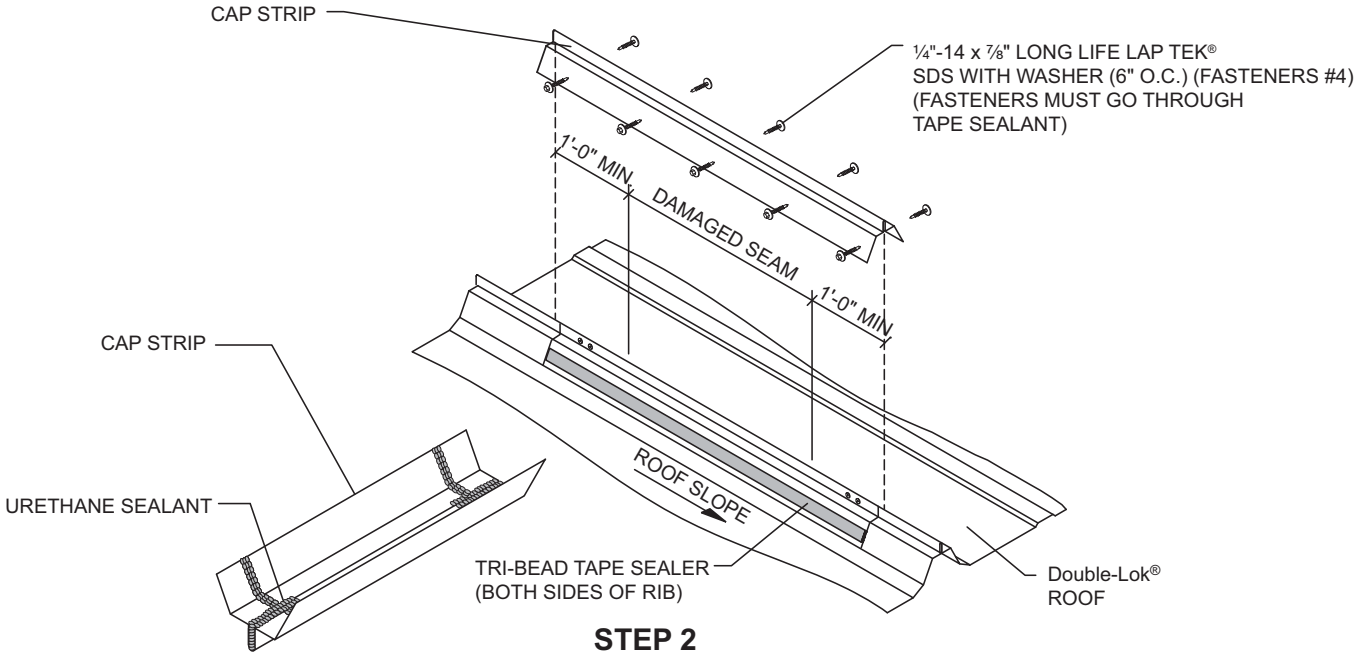

STEP 2

1. Install a continuous run of Tri-Bead tape sealer to both sides of damaged panel rib.
2. Apply a bead of urethane sealant up and over both panel ribs at each end of damaged panel seam.
3. Fill seam portion of repair cap with urethane sealant.
4. Push repair cap down onto panel rib and fasten with ¼"-14 x ⅞" Long Life Lap Tek® (Fastener #4) @ 6" O.C. on both sides. Fasteners must go through tape sealer.
5. Check repair cap at each end to verify that urethane sealant has sealed across the entire cross section of repair cap.

S-5!™ *Double-Lok*® WIND CLAMP INSTALLATION LOCATION

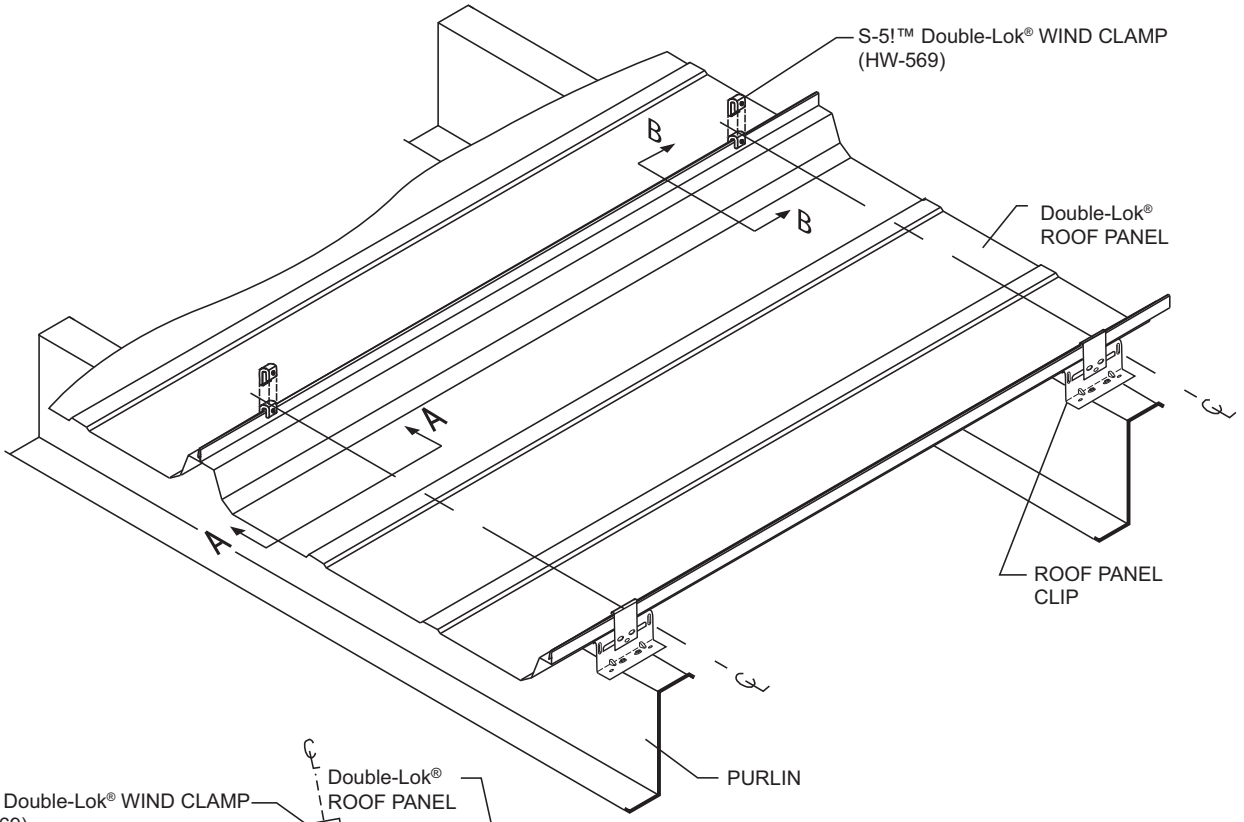

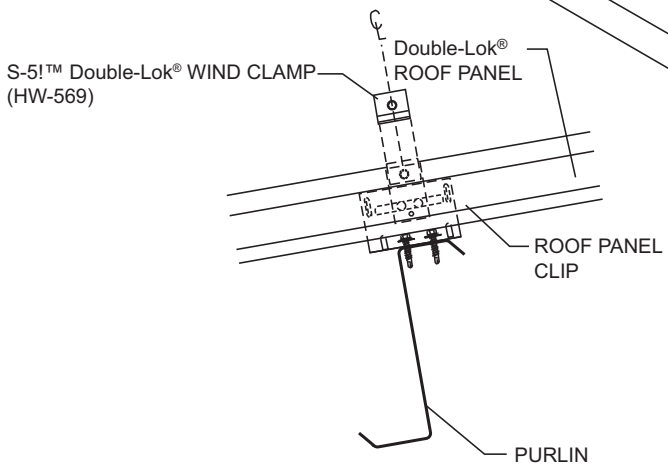

SECTION A-A

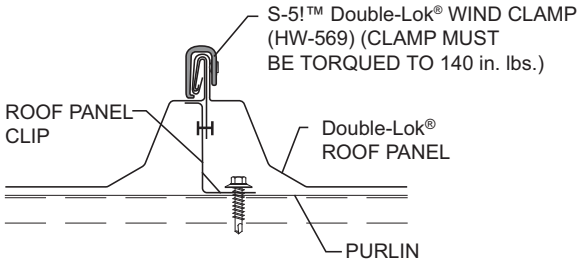

SECTION B-B

NOTES:

1. Only for use with HW-2122, 2124, 2126, and 2128 clips.
2. Torque set screw to 140 in-lbs.
3. **Application zone and feasibility of wind clamps must be determined by a Registered Professional Engineer.**
4. For load tables please inquire.

PINNACLE STRUCTURES. INC.

DESIGN double-lok®

TRIM DETAILS
EAVE TO ENDLAP

HIGH SYSTEM EAVE

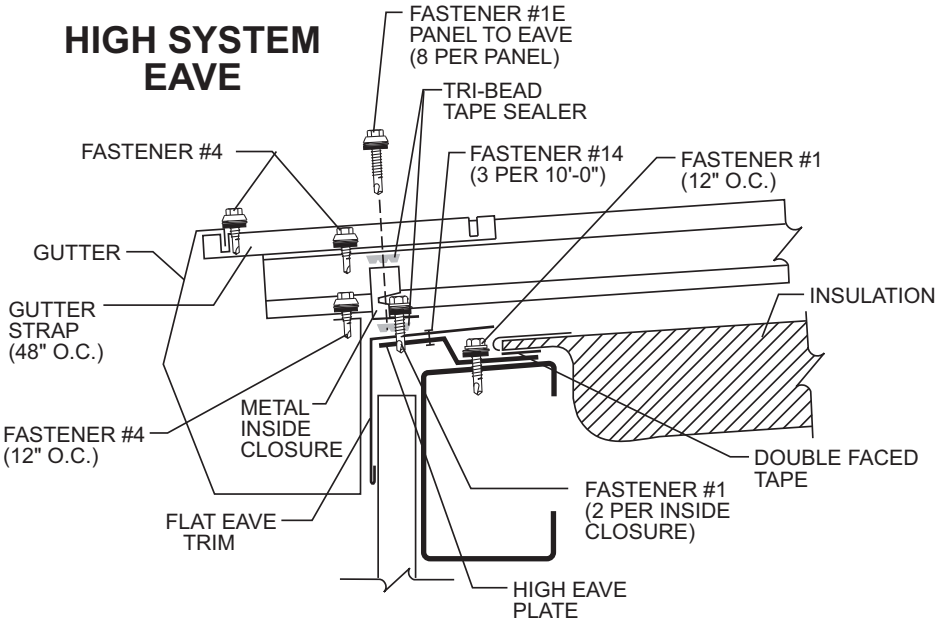

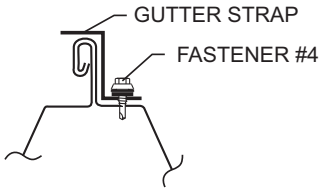

GUTTER STRAP END VIEW

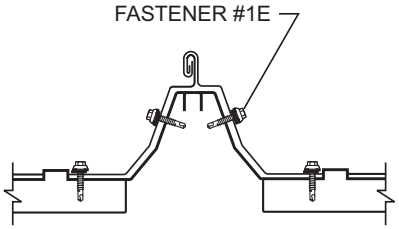

ENDLAP END VIEW

ENDLAP

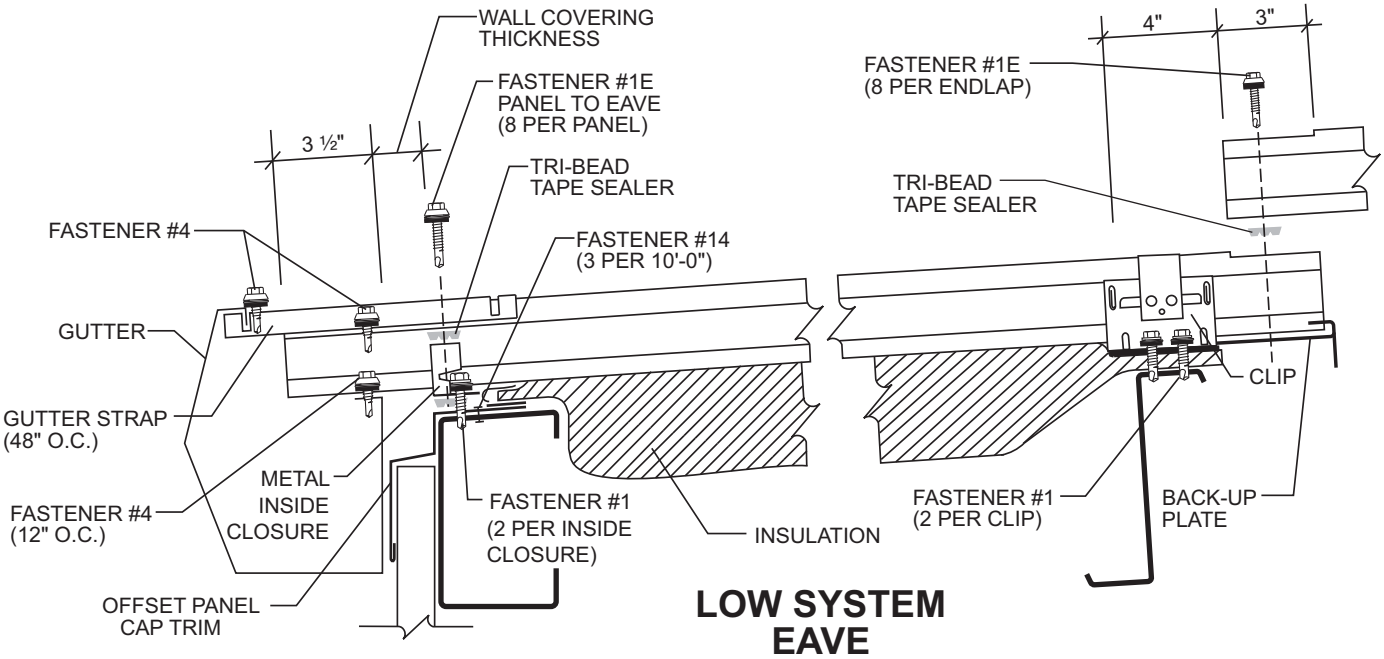

LOW SYSTEM EAVE

TRIM DETAILS
RIDGE

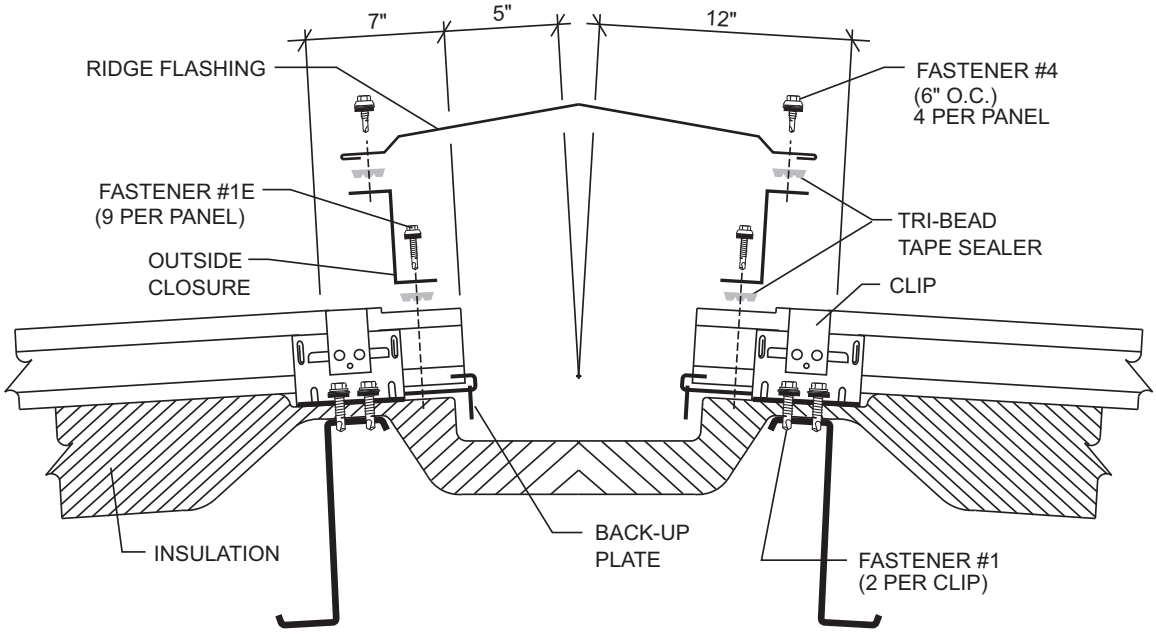

Install the ridge flashing starting and ending 1 ¼" plus endwall thickness outside the steel line. Fasten the ridge flashing to the outside closures with Fastener #4. Install a fastener 1 ½" from panel seam on both sides of panel. Install additional fasteners directly above minor ribs of panel. Four fasteners are required at each panel. Leave 6" unfastened on each end to allow for the rake trim to be installed later. **DO NOT FASTEN THROUGH THE LOCK OF THE STANDING SEAM**.

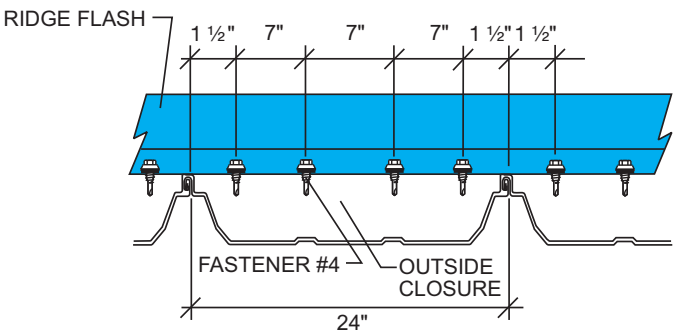

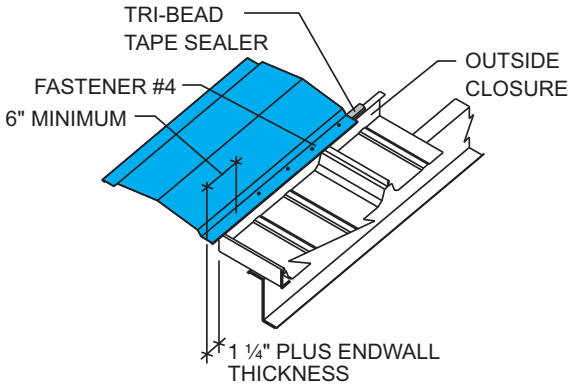

PINNACLE STRUCTURES, INC.

DESIGN double-lok®

TRIM DETAILS
FLOATING PEAK BOX

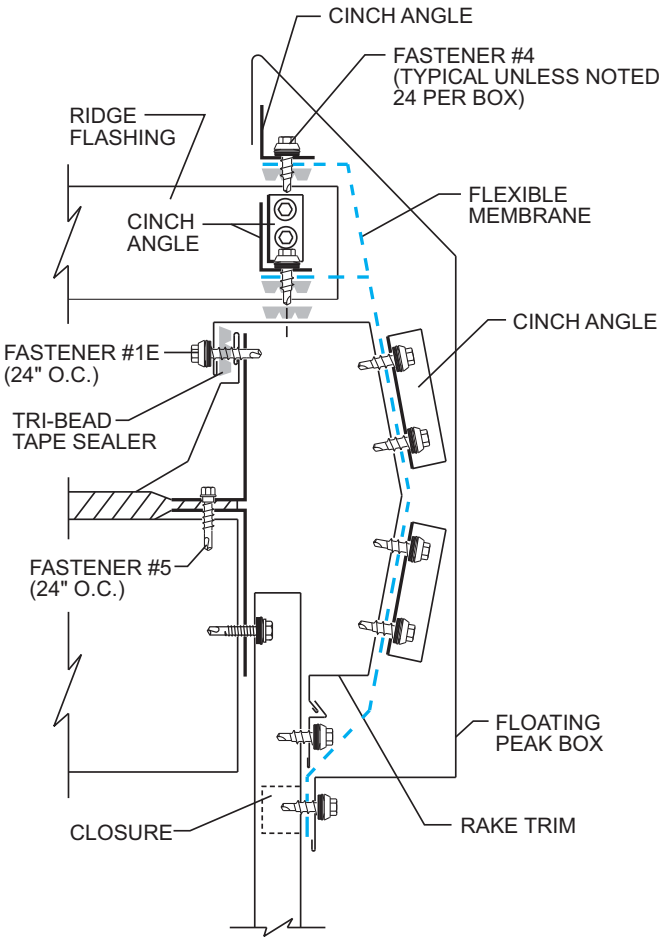

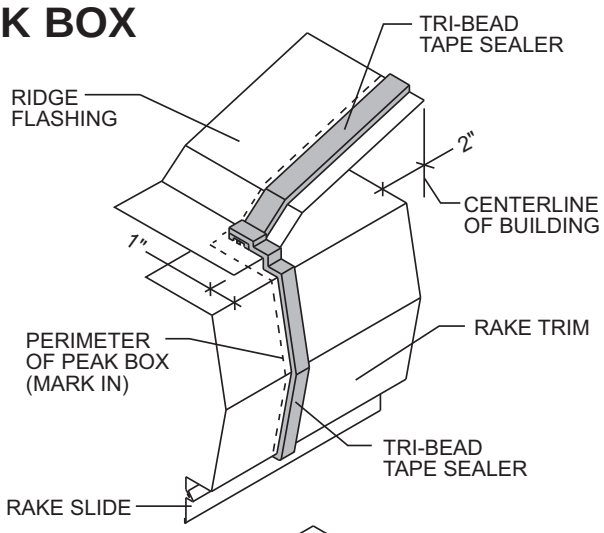

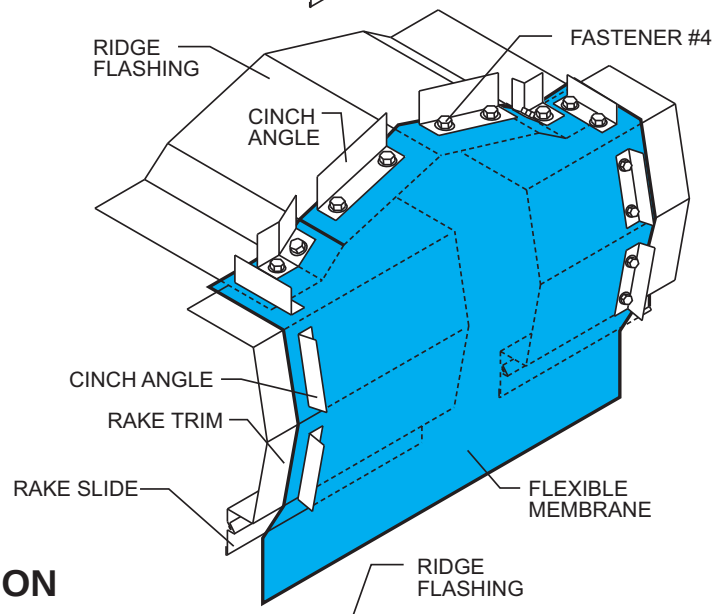

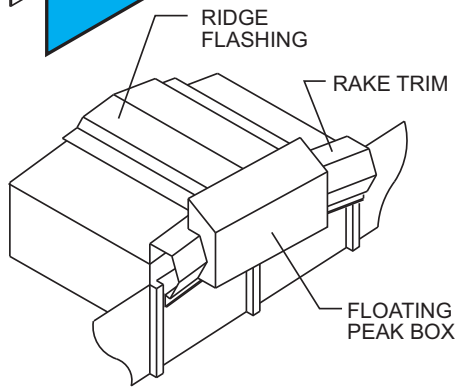

FLOATING PEAK BOX INSTALLATION

1. Install rake trim on each side of ridge to within 2" of centerline of building.
2. Install ridge flash so that it is on top leg of rake trim, 1" back from outside edge.
3. Temporarily set peak box in place and mark perimeter of box on rake trim and ridge flash. Remove peak box.
4. Just inside mark, install tape sealer continuously across ridge flash, then down the face of rake trim on both sides of ridge.
5. Place flexible membrane over tape sealer and hold in place with cinch angles. Cinch angles should be attached with Fastener #4.

   To prevent leaks, flexible membrane should be tight against ridge flash and rake trim with no wrinkles at the sealed edges.
6. Hook top of peak box over cinch angles installed on top of ridge flash and attach bottom of peak box to endwall with Fastener #4.

TRIM DETAILS
RAKE

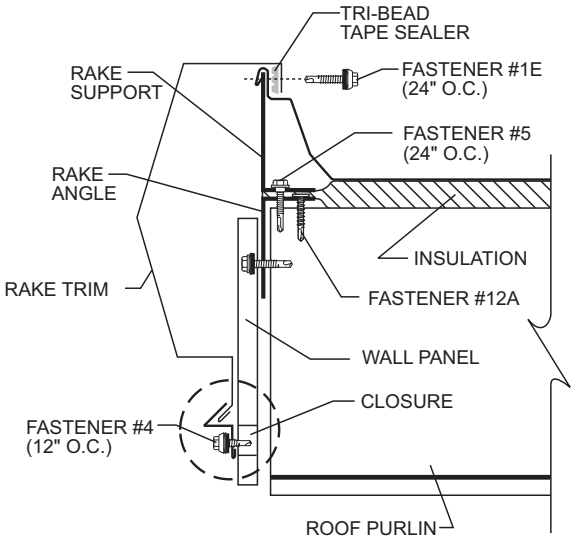

BEGINNING RAKE TRIM

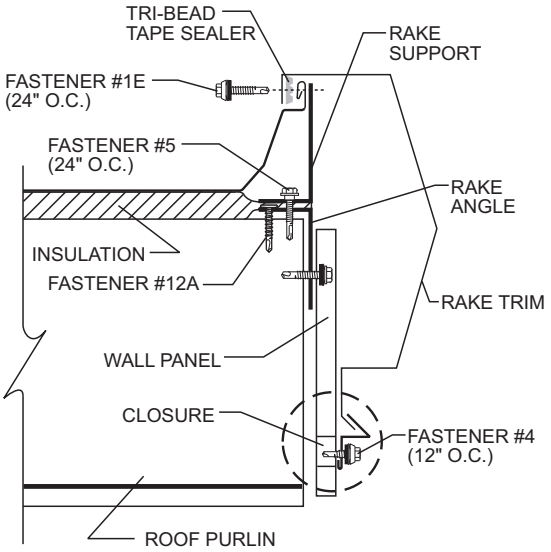

TERMINATION RAKE TRIM ON MODULE

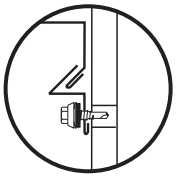

RAKE SLIDE
(FOR FLOATING SYSTEMS ONLY)

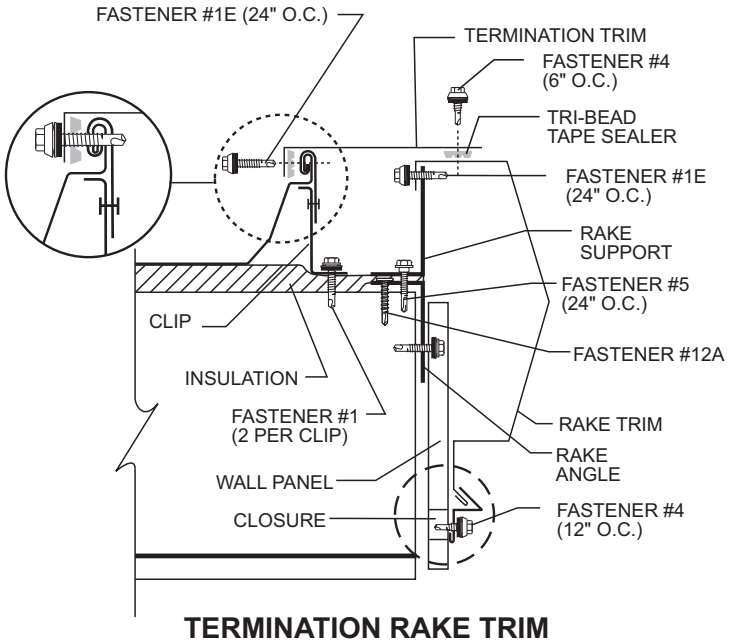

TERMINATION RAKE TRIM OFF MODULE

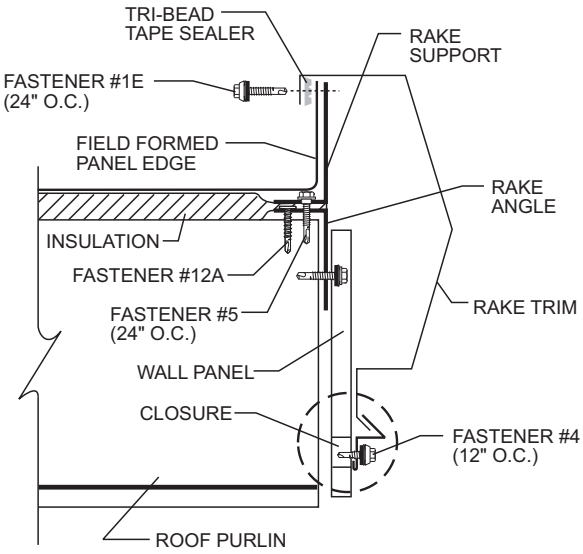

TERMINATION RAKE TRIM OFF MODULE (OPTIONAL)

TRIM DETAILS
RAKE TO RAKE

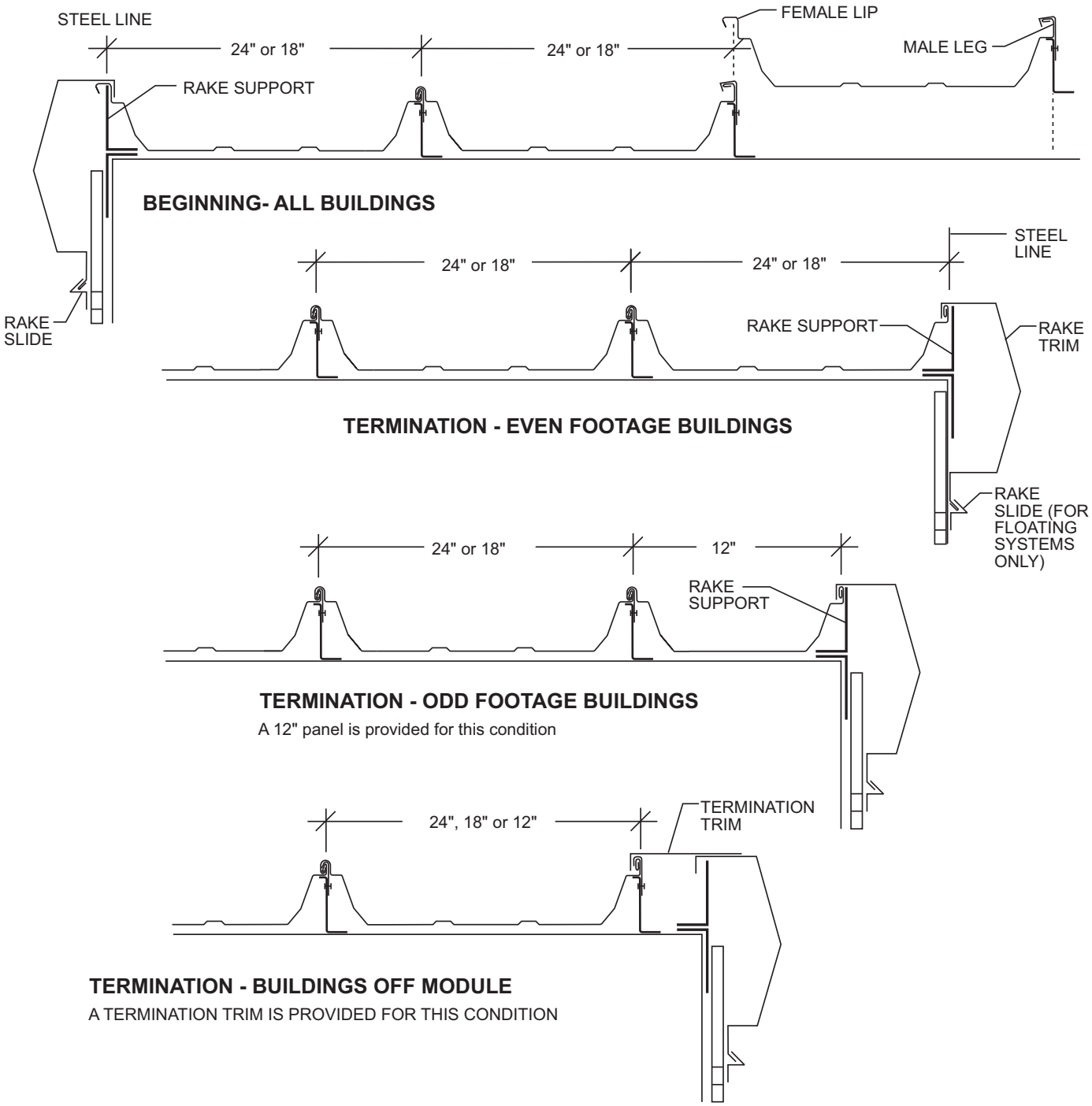

BEGINNING- ALL BUILDINGS

TERMINATION - EVEN FOOTAGE BUILDINGS

TERMINATION - ODD FOOTAGE BUILDINGS

A 12" panel is provided for this condition

TERMINATION - BUILDINGS OFF MODULE

A TERMINATION TRIM IS PROVIDED FOR THIS CONDITION

NOTES:

For an adequate understanding of how to design the **Double-Lok®** roof system, it is important to read the section of this manual which includes all trim details.

TRIM DETAILS
RAKE PARAPET

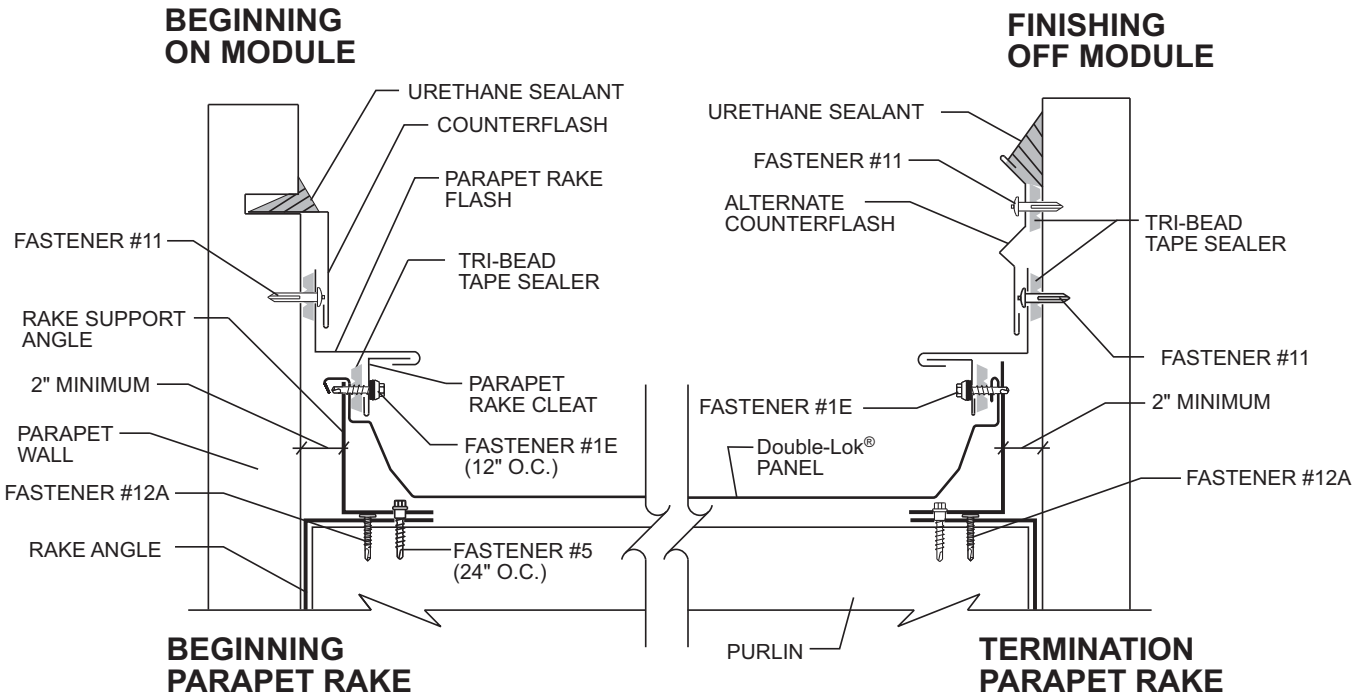

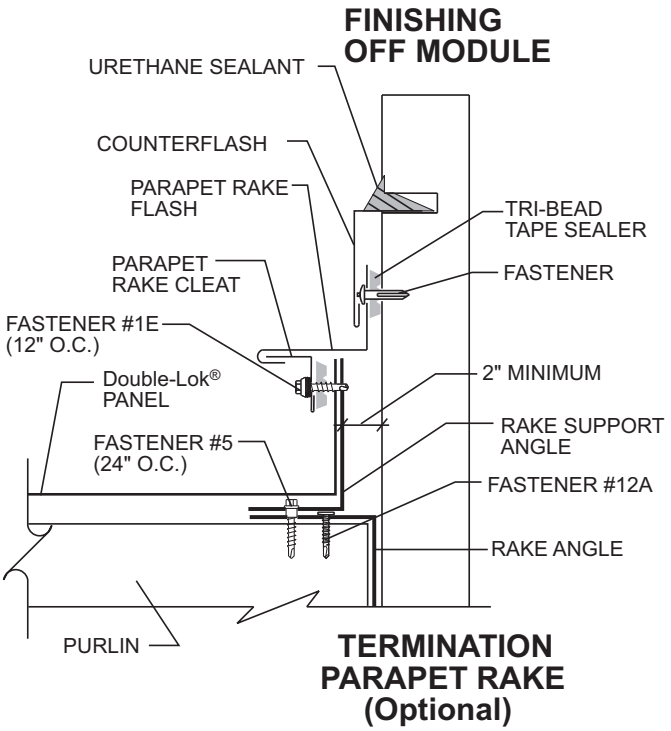

PINNACLE STRUCTURES. INC.

DESIGN double-lok®

TRIM DETAILS
HIGH EAVE PARAPET

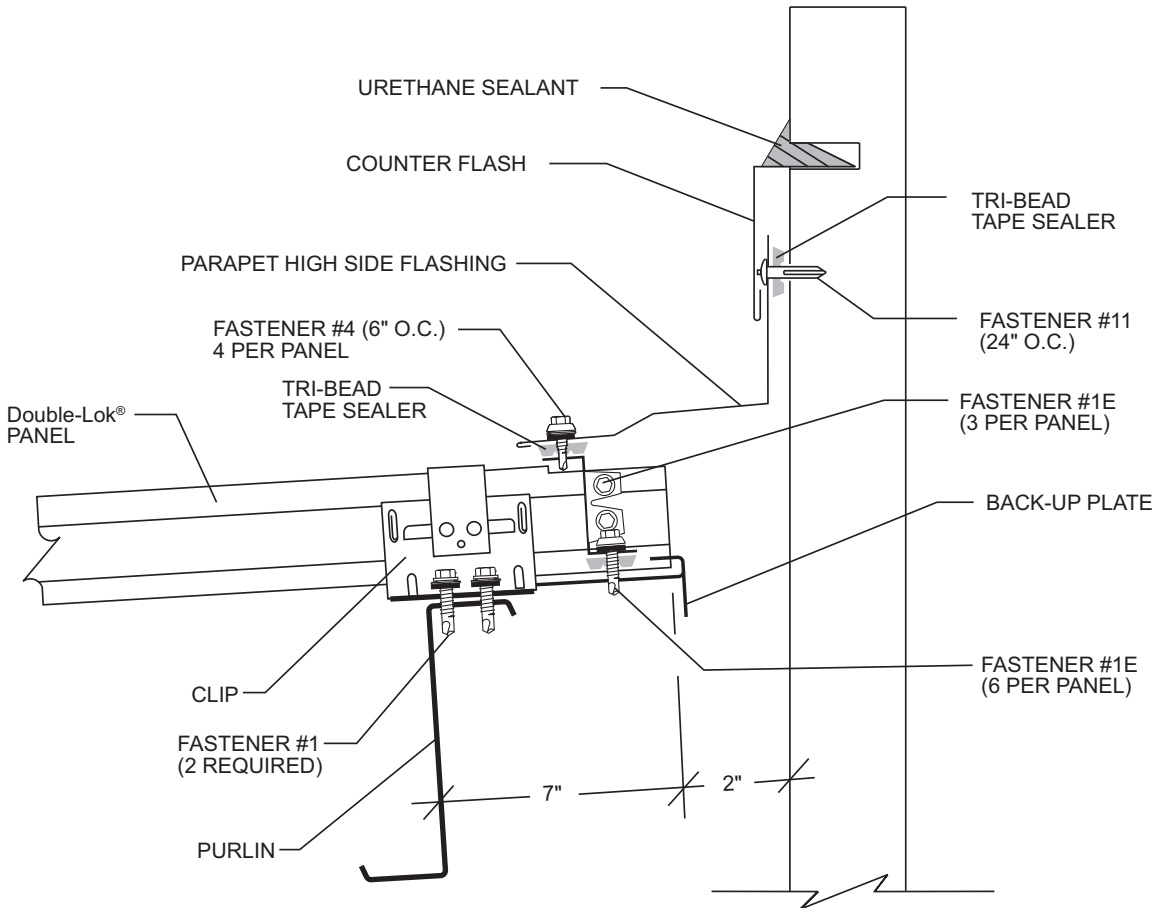

NOTES:
HIGH SIDE PURLIN IS 9" DOWN SLOPE

TRIM DETAILS
EAVE

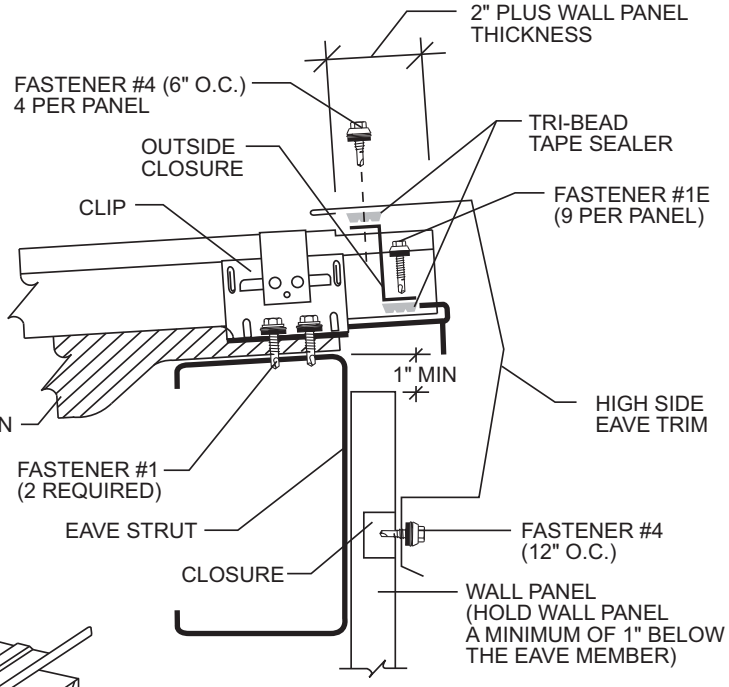

HIGH EAVE

NOTE
Top leg dimension of high side eave trim may have to be increased to accommodate wall thickness.

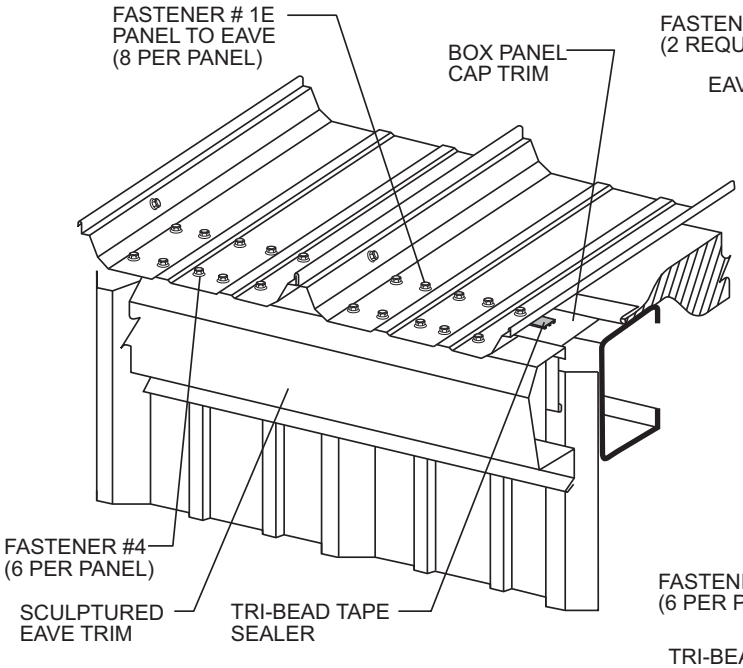

LOW EAVE WITH SCULPTURED EAVE TRIM

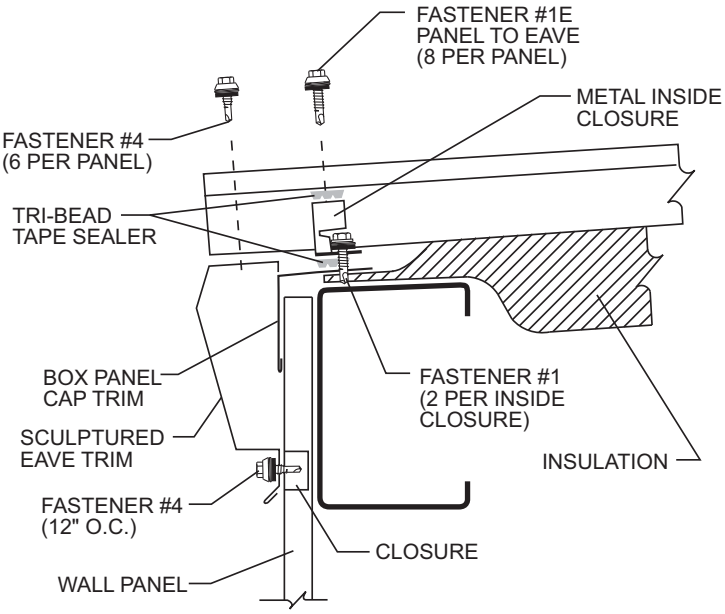

NOTE:
THIS OPTIONAL SCULPTURED EAVE TRIM IS AVAILABLE. HOWEVER, UNDER CERTAIN CONDITIONS IT MAY INDUCE STAINING OF WALL PANELS.

PINNACLE STRUCTURES, INC.

DESIGN double-lok®

TRIM DETAILS
SNOW GUTTER

HIGH SYSTEM

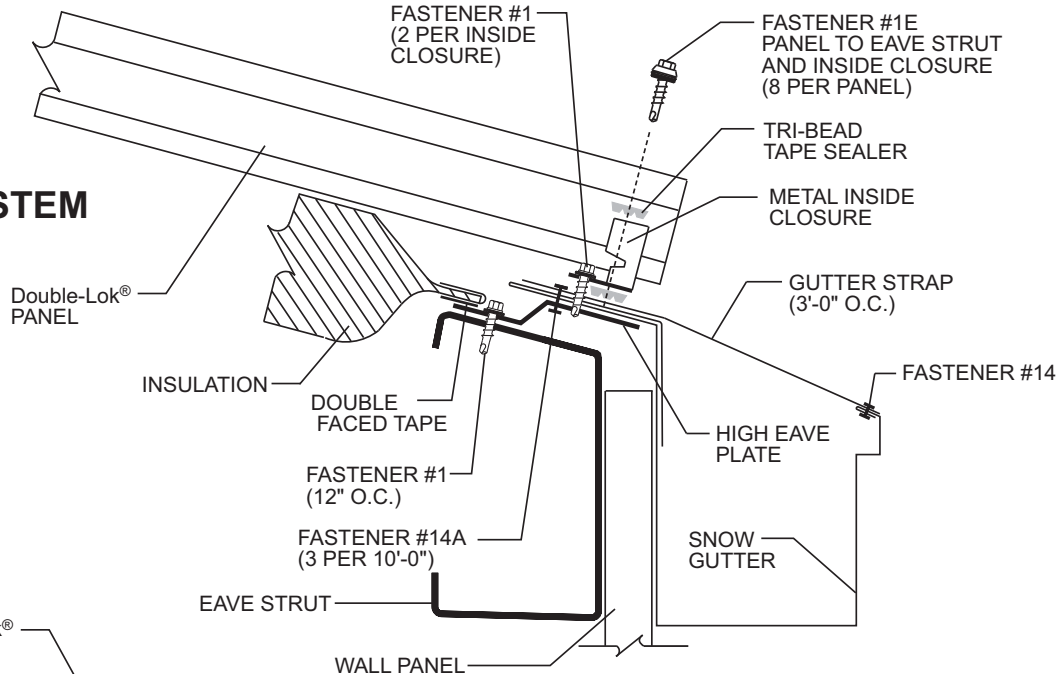

LOW SYSTEM

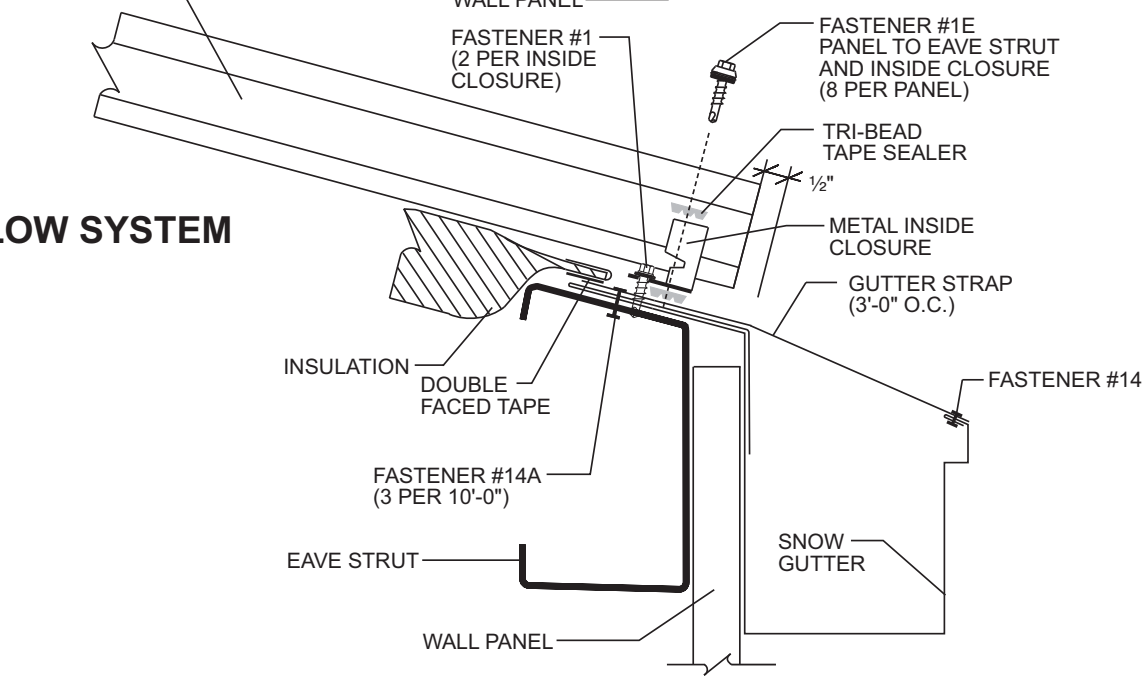

NOTES:

1. Attach gutter to eave plate with Fastener #14A (3 fasteners per 10' piece).
2. Install gutter straps 3'-0" o.c.
3. Apply Tri-Bead tape sealer to slope leg of gutter.
4. Use minor rib tape sealer to fill voids in panel at minor ribs as shown on page DL-36.
5. Install panel with Fastener #1E at prepunched holes. **Panel must not overhang into gutter.**
6. Front top edge of gutter must not project above the plane of the panel pan.

TRIM DETAILS
FLOATING HIP

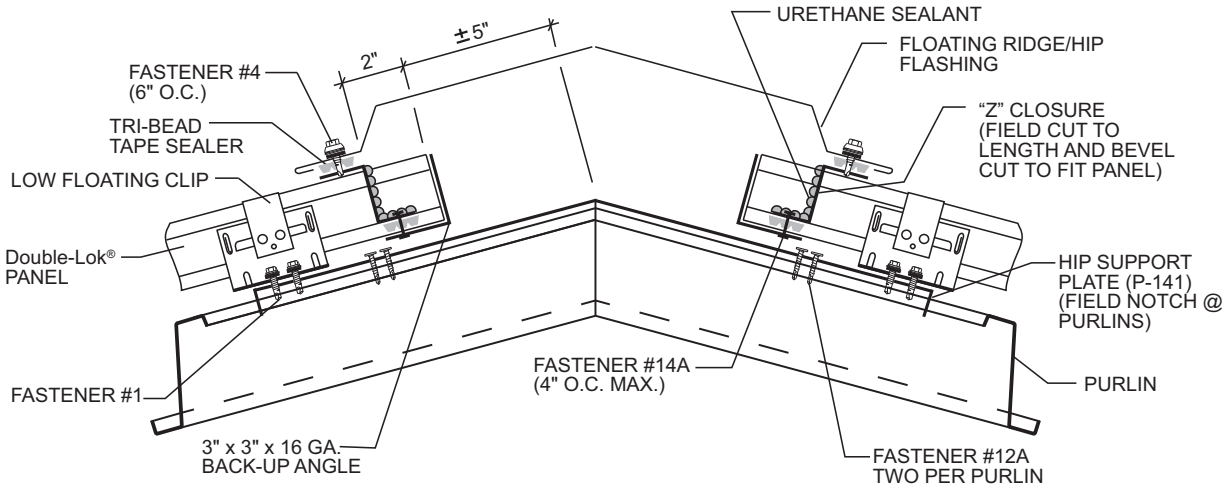

HIP

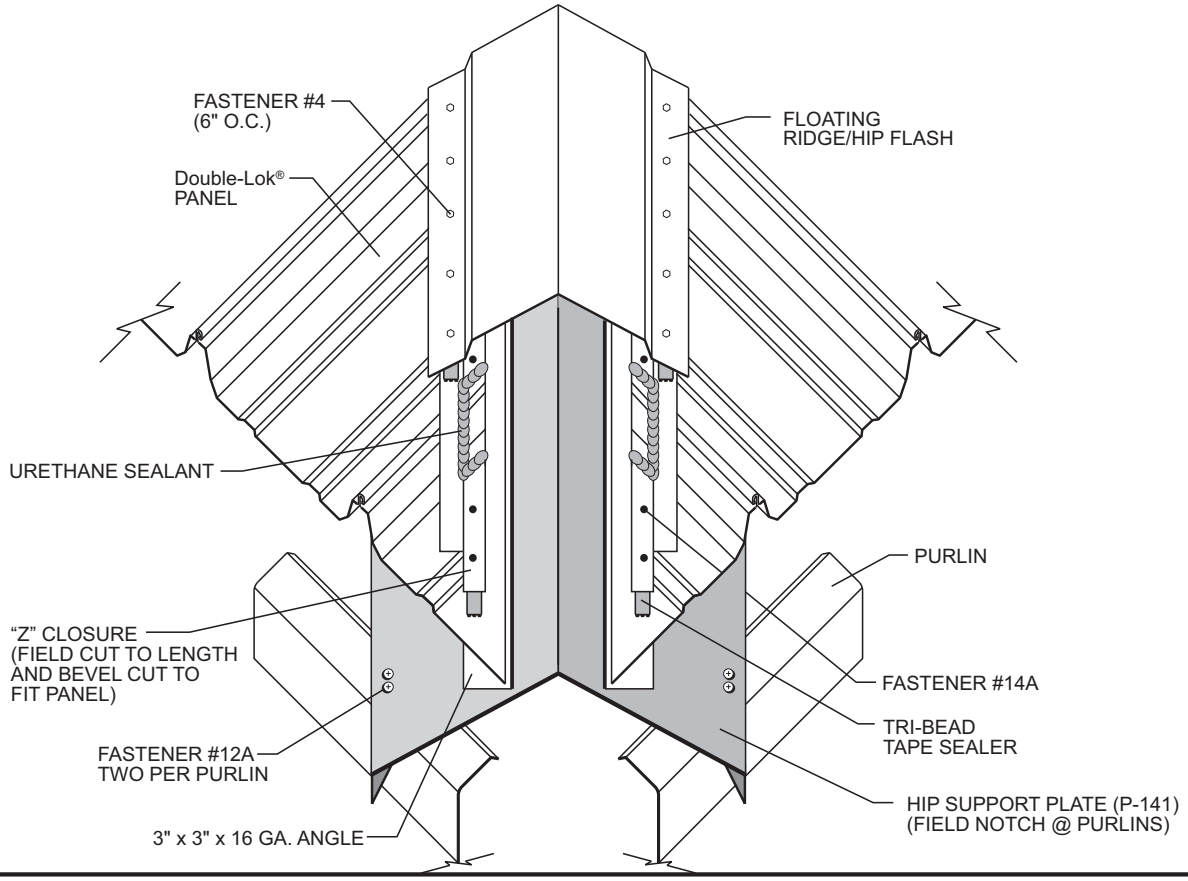

CAUTION

All trapezoidal panels are extremely difficult to install at hips and valleys in a weathertight manner. The use of these details should only be attempted by installation crews that are highly experienced. In order to assure weathertightness, Pinnacle recommends one of it's vertical leg standing seam systems for use on roofs that require hips and valleys.

PINNACLE STRUCTURES, INC.™

DESIGN double-lok®

TRIM DETAILS
VALLEY

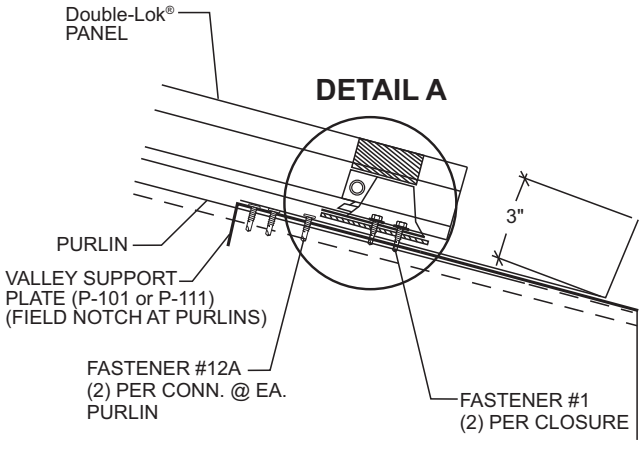

LOW SYSTEM

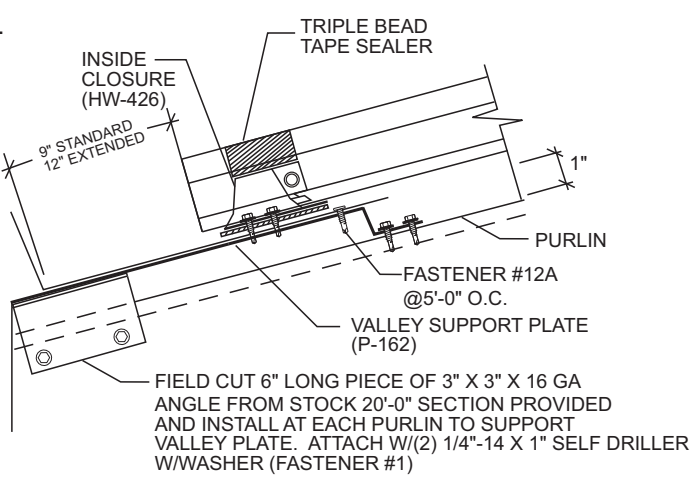

HIGH SYSTEM

NOTE:
12" VALLEY DIMENSION MUST BE USED IN LOW SLOPE CONDITIONS AND IN VALLEYS LONGER THAN 30'-0".

VALLEY DETAIL IS SYMMETRICAL ABOUT CENTER LINE

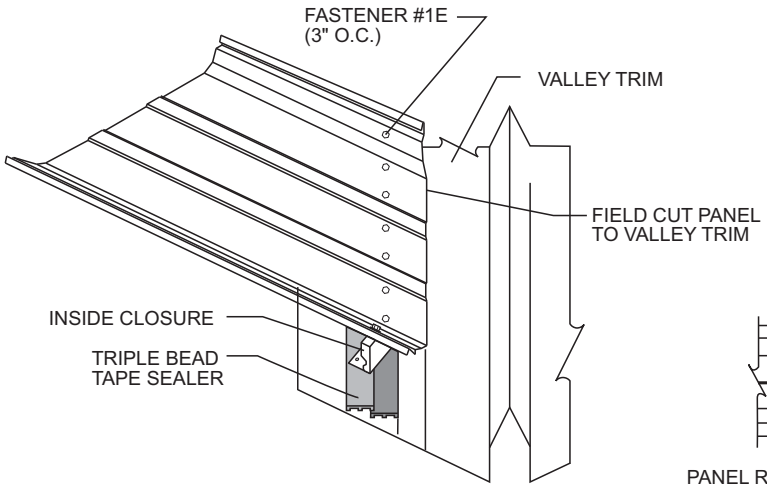

DETAIL A
(ISOMETRIC)

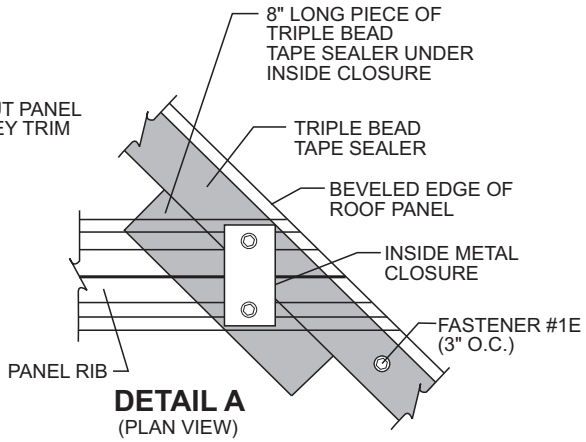

DETAIL A
(PLAN VIEW)

* For valleys over 30'-0" long, use extended valley trim.

CAUTION

All trapezoidal panels are extremely difficult to install at hips and valleys in a weathertight manner. The use of these details should only be attempted by installation crews that are highly experienced. In order to assure weathertightness, Pinnacle recommends one of it's vertical leg standing seam systems for use on roofs that require hips and valleys.

PROPER HANDLING, STORAGE AND MAINTENANCE OF PAINTED AND GALVALUME PLUS® PANELS

PANEL HANDLING

- All panel bundles must be inspected during unloading and carrier must be advised immediately if damage is noted.
- Never unload or move panel bundles that have been opened without adequately clamping them. Without the banding to hold the bundle stable, panels may shift during unloading or movement, causing the bundle to fall.
- Never use wire slings to unload or move panel bundles.
- When unloading or moving panel bundles over 20' long, a spreader bar may be required. It is the erector's responsibility to determine the location and number of lift points required to safely unload or move panel bundles.
- When handling individual panels, always wear protective gloves. OSHA safety regulations must be followed at all times.
- When cutting panels, always wear all required safety equipment including, but not limited to, safety glasses and gloves. Cut panels with nibblers, shears or snips. Do not use abrasive blade saws as these will melt the Galvalume® coating causing the panel to edge rust which will void the Galvalume® and paint warranties. Drilling fasteners into panels will create metal filings that will rust and create an unsightly stain. Metal filings must be removed by sweeping or wiping down panels immediately after installation to avoid this occurrence.

PANEL STORAGE

- If water is permitted to enter panel bundles, it is necessary to open bundles, separate the panels and dry all surfaces.
- Store bundled panels off the ground sufficiently high to allow air circulation beneath bundle and to prevent rising water from entering bundle. Slightly elevate one end of bundle.
- Prevent rain from entering bundle by covering with tarpaulin, making provision for air circulation between draped edges of tarpaulin and the ground.
- Prolonged storage of panels in a bundle is not recommended. If conditions do not permit immediate erection, extra care should be taken to protect panels from white rust or water marks. If panels have not been erected within three weeks of receipt, the panels should be removed from the bundle for inspection. Condensation may cause damage to panels. The manufacturer's paint and Galvalume® warranties do not cover damage caused by improper panel storage.

PROPER HANDLING, STORAGE AND MAINTENANCE OF PAINTED AND GALVALUME PLUS® PANELS

(CONTINUED)

PANEL MAINTENANCE

- Never allow Galvalume® panels to come into contact with or water runoff from dissimilar materials such as copper, lead, or graphite. These materials will cause galvanic corrosion of the panels and will void the Galvalume® warranty. This includes treated wood and AC condensate, both of which contain copper compounds. This also applies to painted panels.
- Always use long life fasteners in all exposed fastener applications. Non long life fasteners can rust through the panel at each exposed fastener location. Use of non long life fasteners in exposed applications will void the Galvalume® and paint warranties.
- Panels should be protected against exposure to masonry products, strong acids or bases and solvents. Exposure to these agents may etch or stain Galvalume Plus® panels and cause painted panels to blister or peel.
- Never allow anyone to apply any coating or patching material to the panel surface. These products may contain chemicals that will adversely affect the Galvalume Plus® or paint coating. Also, water may become trapped between the coating material and the panel, causing premature corrosion.

If you have any question as to proper methods to use in the handling, storage or maintenance of these panels, call your nearest manufacturer representative.

NOTICE

Uniform visual appearance of Galvalume Plus® coated panels cannot be guaranteed. The Galvalume Plus® coating is subject to variances in spangle from coil to coil which may result in a noticeable shade variation in installed panels. The Galvalume Plus® coating is also subject to differential weathering after panel installation. Panels may appear to be different shades due to this weathering characteristic. If uniform visual appearance is required, the manufacturer recommends that our prepainted Signature® 200 or Signature® 300 panels be used in lieu of Galvalume Plus®. Shade variations in panels manufactured from Galvalume Plus® coated material do not diminish the structural integrity of the product. These shade variations should be anticipated and are not a cause for rejection.

NOTES

PINNACLE™
STRUCTURES, INC.

For the most current information available, visit our Web site at www.pinnaclestructures.com